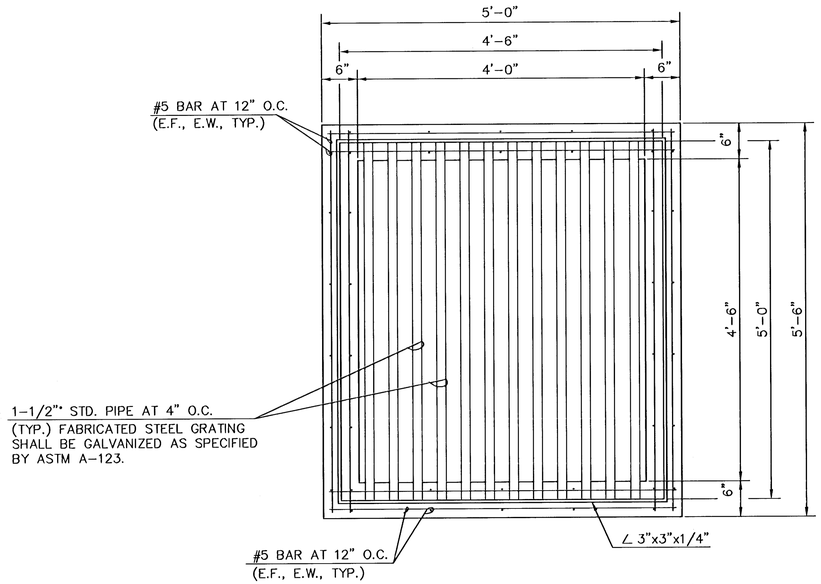

PLAN VIEW

CONTRACTOR MAY SUBSTITUTE 8" BRICK WALL FOR 6" REINFORCED CONCRETE WALL.

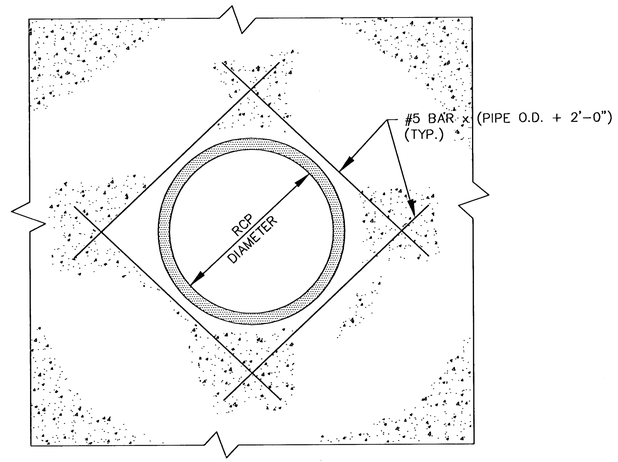

NOTE:
CUT REINFORCING AS REQUIRED TO CLEAR RCP.

TYPICAL REINFORCING AT PIPE

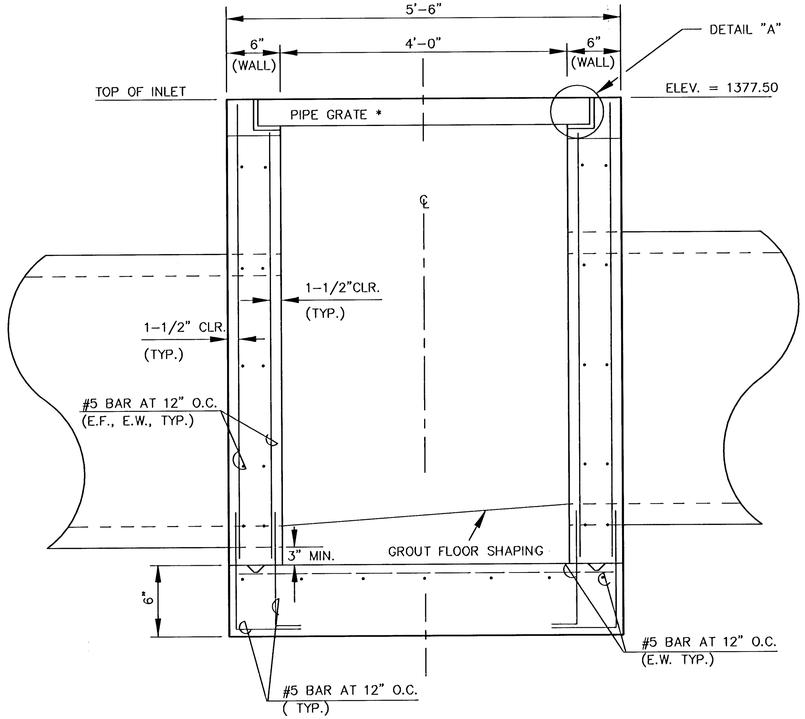

ELEVATION VIEW

REINFORCED CONCRETE AREA INLET

MATERIAL SPEC'S

MORTAR – TYPE "M"
BRICK – ASTM C62 GRADE MW
STEEL – ASTM A36 OR EQUIVALENT
GALV. ASTM A-123 STDS.
CONCRETE – $F_u' = 4{,}000$ PSI MINIMUM WITH 6 SACKS OF CEMENT PER CUBIC YARD MINIMUM.

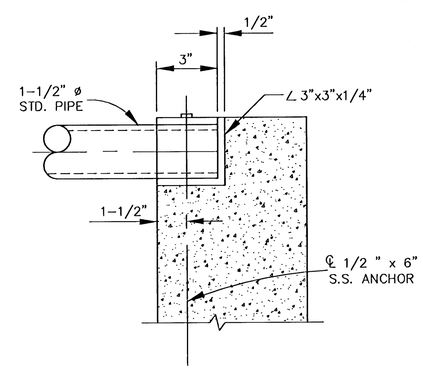

NOTE:
FABRICATED STEEL GRATING SHALL BE GALVANIZED AS SPECIFIED BY ASTM A-123.

DETAIL "A"

ORIFICE EQUATION				
$Q=C*A*\sqrt{2gh}$				
h (DEPTH)	2g	C	A	Q
0.5	64.4	0.7	8.625	34.3 cfs
1.0	64.4	0.6	8.625	41.5 cfs
2.0	64.4	0.6	8.625	58.7 cfs
2.0	64.4	0.7	8.625	68.5 cfs
3.0	64.4	0.6	8.625	71.9 cfs
4.0	64.4	0.6	8.625	83.1 cfs
5.0	64.4	0.6	8.625	92.9 cfs
6.0	64.4	0.6	8.625	101.7 cfs
7.0	64.4	0.6	8.625	109.9 cfs
8.0	64.4	0.6	8.625	117.5 cfs

H:\CIVIL\JOBS8\02172\DWG\SHEETS\ZELTA\02172D02.DWG

MKEC ENGINEERING CONSULTANTS
411 N. WEBB ROAD
WICHITA, KS. 67206
316-684-9600

WOODLAND LAKES ESTATES THIRD ADDITION - ZELTA PHASE
PROJECT NAME

REINFORCED CONCRETE AREA INLET
SHEET TITLE

BSH	*JAS*	*ASH*
DESIGN BY:	DRAWN BY:	CHECKED BY:
JUNE 2003	*02172*	***3 / 32***
DATE	DRAWING NAME	SHEET / OF