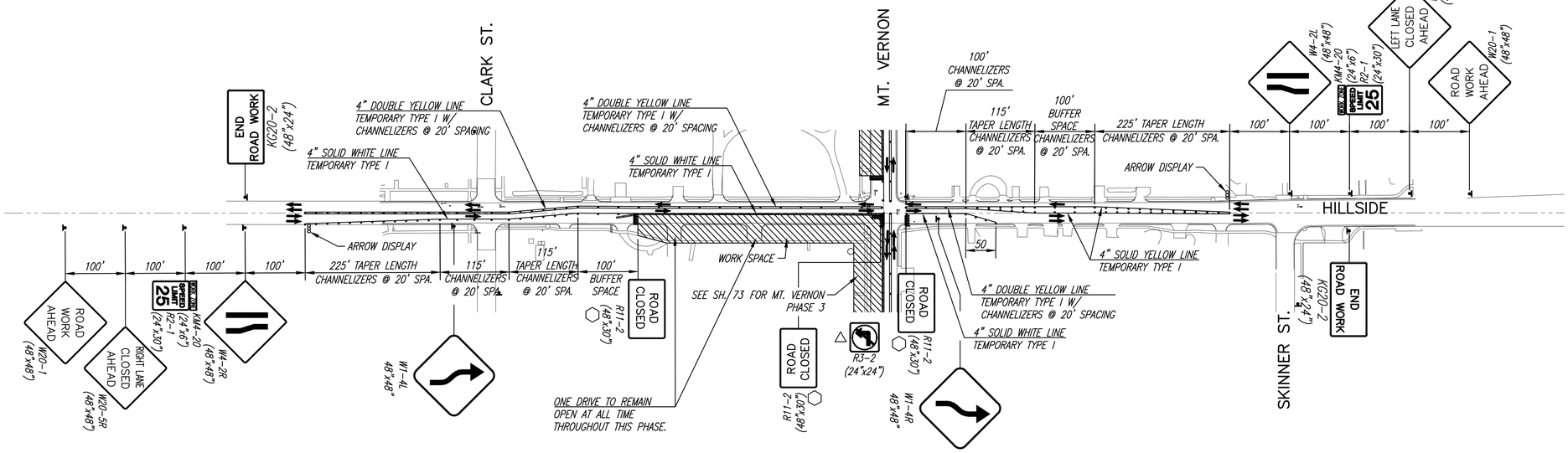

HILLSIDE TRAFFIC CONTROL - PHASE 3

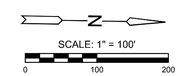

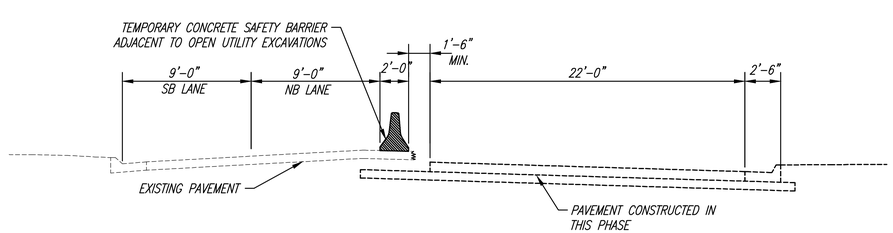

HILLSIDE–PHASE 3 SECTION
(SOUTH OF MT. VERNON)

LEGEND

- Type III Barricades with lights
- Mount On Type III Barricade
- Type B Warning Light
- Sign
- Traffic Flow
- Work Space
- Construction Completed
- Channelizer
- Erect two signs for each approach. One sign to be mounted on traffic signal mast arm or span wire.

MKEC
Wichita, KS • 316-684-9600

STREET IMPROVEMENTS FOR

MT. VERNON & HILLSIDE INTERSECTION

PAVING PLANS

©2019
MKEC Engineering
All Rights Reserved
www.mkec.com
These drawings and their contents, including, but not limited to, all concepts, designs, & ideas are the exclusive property of MKEC Engineering (MKEC), and may not be used or reproduced in any way without the express consent of MKEC.

TRAFFIC CONTROL PLAN, PHASE 3 HILLSIDE

PROJECT NO.	472-85286
DATE	DATE
SCALE	1"=100'

DESIGNED	DRAWN	CHECKED
JRA	WNJ	JRA

NO.	REVISION	DATE

SHEET NO.

75 OF 101

Sh. No. 75

J:\PROJECTS\2016\160\10151_MT. VERNON AND HILLSIDE_160151 CAD\SHTS\05 CIVIL\TRAFFIC\10151-TP04.DWG

PLOTTED: Tuesday, April 16, 2019 @ 04:05PM