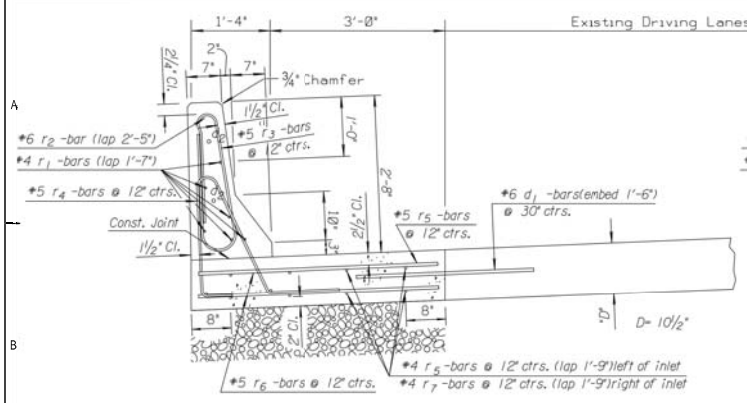

BARRIER/SHOULDER SECTION

(1.6% CROSS SLOPE OR MATCH EXISTING)

Place "Crushed Rock Base, 6" Reinforced" under limits of new shoulder pavement (Type AA Compaction). The tools, materials, labor and incidentals necessary to complete the work shall be Subsidiary to the bid item "Concrete Saftey Barrier".

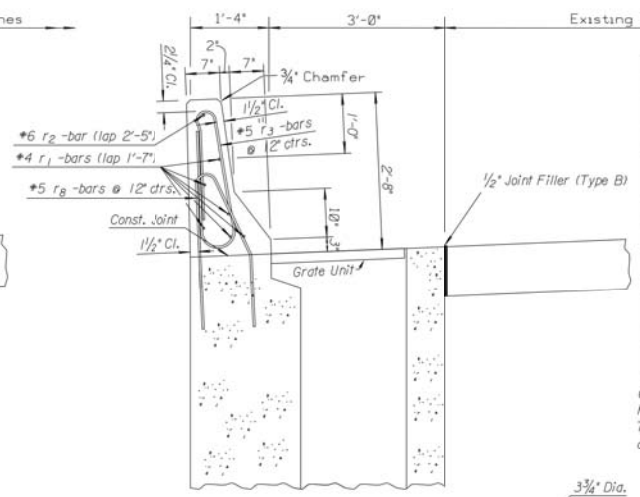

BARRIER/INLET SECTION

BARRIER/CONC. SHO. (For Information Only)					
Bar	Bar Size	Shape	No. of Bars	Length ft.	
r_1	#4		6	1'-0"	per l.f
r_2	#5		1	1'-0"	per l.f
r_3	#5		1	6'-7"	per l.f
r_4	#5		1	6'-4"	per l.f
r_5	#5		2	1'-0"	per l.f
r_6	#5		10	1'-0"	per l.f
r_7	#4		10	1'-0"	per l.f
r_8	#5		1	7'-10"	per l.f
d_1	#6		1	3'-0"	per l.f
d_2	#5		4	3'-0"	total
Concrete Pavement (10 1/2" Uniform) (AE)					0.14 cu. yd./l.f.
Barrier Conc. Gr. 3.0 (AE)					.08 cu. yd./lin ft.

Quantities shown are for (1) lin. ft. Barrier/Shoulder Section on Reinforced Concrete Pavement (10.5" Uniform(AE) 4'-4" wide. These quantities are provided for "information only" and don't reflect additional overlap lengths in longitudinal steel.

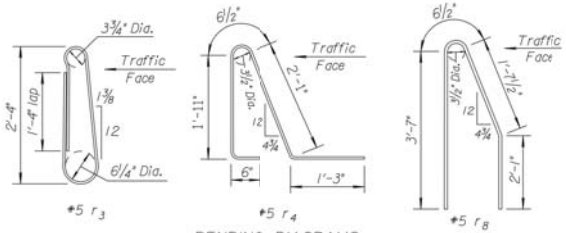

BENDING DIAGRAMS

Note: All dimensions are out to out of bars.

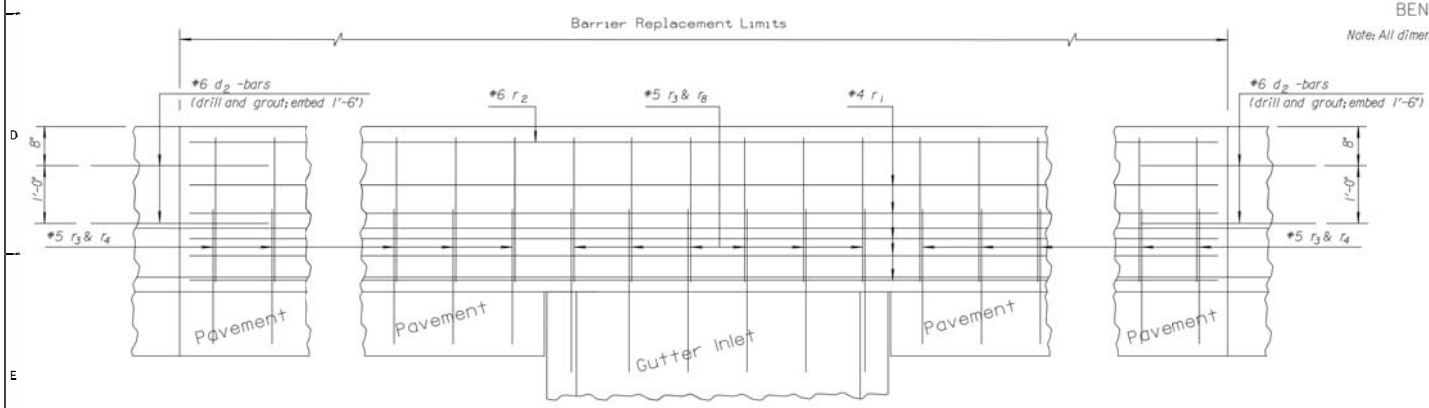

ELEVATION (Barrier)

GENERAL NOTE

Use Concrete Grade 3.0 (AE) or Concrete Pavement Mix (Contractor's Option) except where noted, see standard specifications.

Use Grade 60 Epoxy Coated reinforcing steel. See details for spacing, keep a minimum reinforcing steel clear distance of 1 1/2", see standard specifications.

The section furnished must generally comply with the dimensions shown. Requests for minor variations in section geometry may be submitted for review.

Concrete barriers are cast in place only.

Bevel all exposed edges with a 3/4" triangular molding.

See Standard Specification to cut and epoxy coat dowel bars.

CONSTRUCTION JOINTS

Place Joint Material (Nonextruding, Type B) where shown for structures and at the end of day construction joint.

CONTRACTION JOINTS

Form or saw Contraction joints on 20' centers maximum. Where barrier is on or adjacent to concrete pavement space joints to match contraction joints and definite transverse cracks in the pavement. Contraction joints not to exceed 20' centers.

DRILL AND GROUT

This item shall consist of grouting reinforcing steel into the existing concrete, where required by the Engineer, with an epoxy grout. Follow KDOT Specifications 842 and any associated Special Provisions. Follow the Manufacturer's directions for mixing, application and curing. The tools, materials, labor and incidentals necessary to complete the work shall be Subsidiary to the bid item "Concrete Safety Barrier".

PEC
PROFESSIONAL ENGINEERING CONSULTANTS
103 SOUTH TOPEKA
WICHITA, KS 67202
316-265-2691 www.pec1.com

MICHAEL SETH MEDVEDEV
LICENSED
18841
KANSAS
PROFESSIONAL ENGINEER
05/01/2019

I-135 DRAINAGE CANAL REPAIRS-PHASE 1

CITY OF WICHITA, KS

Issue		
1	SENT FOR REVIEW	4/16/19
2	SENT FOR REVIEW-KDOT	4/26/19
3	SENT FOR FINAL	5/01/19

JOB NO.	197042-001
DATE	MAY 2019
PM	BMM
DESIGNED BY	RJS
DRAWN BY	BJS
CHECKED BY	AKL

BARRIER WALL-RD625D

CU502

CU502 OF 19

Saved 5-1-2019 4:03:34 PM by BJS
Plot Scale 1:1 5/2/2019 8:06:00 AM by BILL SERSON, CET
U:\Wichita-Civil\2019\197042\001\Mark-Trans\Drawings\197042-001-10-CU502 BARRIER WALL-RD625D