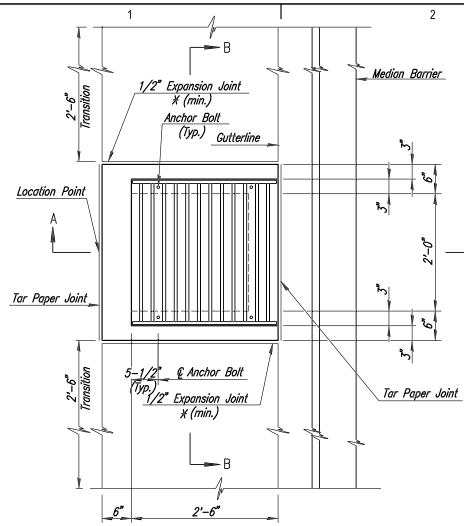

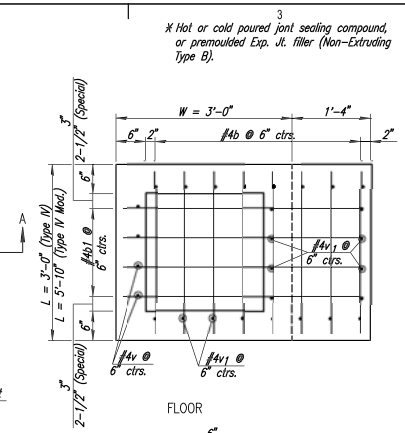

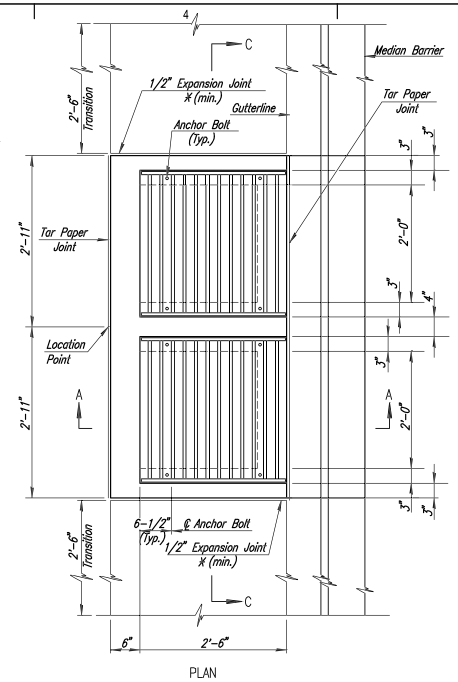

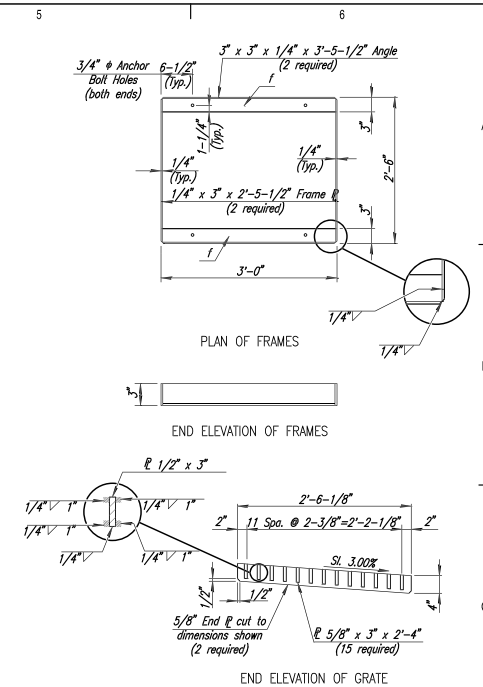

Welded structural steel grate and frame weight= 316 lbs.
Steel for grate and frame shall comply with A.S.T.M. A36-96, A242-93a, or A441.

Note: To prevent grate from rocking on bearing angles, machine finish surfaces indicated thus "f".
All materials for the grates shall be galvanized after fabrication.

GRATE AND FRAME DETAILS

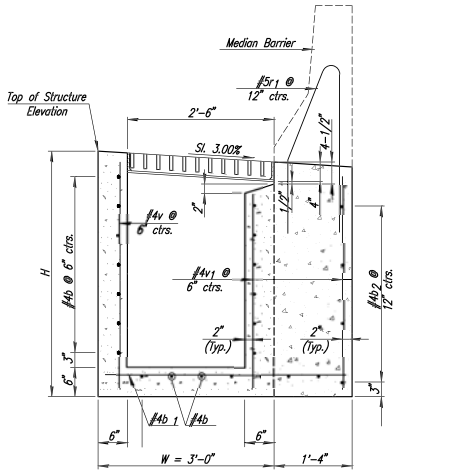

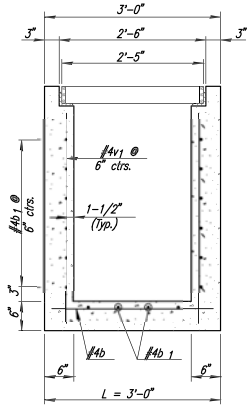

GUTTER INLET

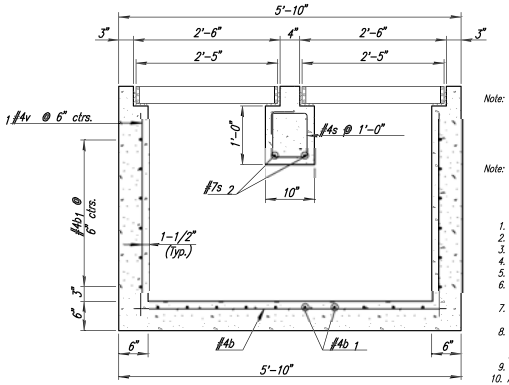

GUTTER INLET (SPECIAL)

Note: No joint in the median traffic barrier shall fall within 2'-0" of the inlet walls. Care shall be taken when setting the anchor bolts for the frame, that the bolts are placed in the proper position.

Note: Adjust base of barrier at inlet locations to provide a smooth line along the top of the barrier.

GENERAL NOTES:

1. Use Grade 4.0 Concrete (AE) Concrete throughout.
2. All exposed edged shall be finished with an edging tool.
3. Reinforcing bars shall be bent around pipe.
4. No deductions in concrete quantities shall be made for pipe openings.
5. At the contractor's option, Grade 4.0 Concrete (AE) or mix used in concrete pavement may be used throughout.
6. When so ordered by the Engineer, the top of the inlet shall be sloped slightly to approximately fit the ground line or other conditions.
7. All exposed cast iron surfaces shall be painted either in the shop or in the field with one coat of a zinc dust paint, followed by two field coats of aluminum paint.
8. Floor of inlet shall be shaped as shown in various "Examples" on Reinforced Concrete Manhole Standard No. RD730. Concrete used for shaping shall be unreinforced Class 3.0 Concrete. No addition in concrete quantities shall be made for shaping floor of inlets.
9. All bars are #4 bars @ 6" spacing and shall have a minimum clearance of 1-1/2" unless otherwise noted on plans.
10. All reinforcing steel shall conform to the requirements of ASTM A615-96, Grade 60.
11. When directed by the Engineer, small openings may be required in the back of the inlet in order to drain a low area.
12. Reinforcing bars will extend through the opening. No deduction in concrete quantities will be made for these openings.
13. The weight of castings includes no allowance for fillets and overruns. All castings shall be gray iron and shall comply with ASTM A 48-94, Class 25 S.

PEC
PROFESSIONAL ENGINEERING CONSULTANTS
103 SOUTH TOPEKA
WICHITA, KS 67202
316-262-2691 www.pec1.com

MICHAEL SETH MIDDLETON
LICENSED
18841
KANSAS
PROFESSIONAL ENGINEER
05/01/2019

I-135 DRAINAGE CANAL REPAIRS-PHASE 1

CITY OF WICHITA, KS

Issue:		
1	SENT FOR REVIEW	4/16/19
2	SENT FOR REVIEW-KDOT	4/26/19
3	SENT FOR FINAL	5/01/19

JOB NO.	197042-001
DATE	MAY 2019
PM	BMM
DESIGNED BY	RJS
DRAWN BY	BJS
CHECKED BY	AKL

GUTTER INLET DETAILS

CU501

CU501 OF 19

Saved 5-1-2019 1:30:53 PM by BJS
Plot Scale 1:1 PSZ=24x36 by BILL SERSON, CET
U:\Wichita-Civil\2018\197042\001\Mark-Trans\Drawings\197042-001-09-CU501-GUTTER INLET DETAILS