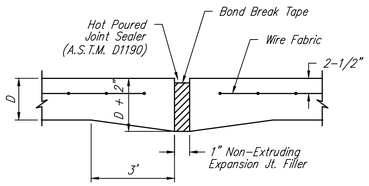

EXPANSION JOINT

NOTE: Extra Thickness to be Subsidiary to Price of Square Yards Pavement

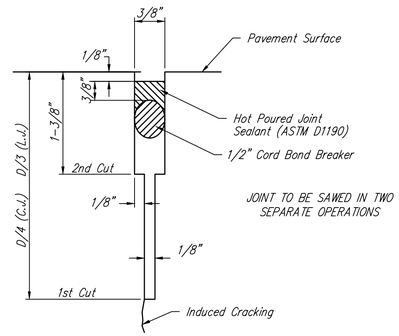

SAW JOINT DETAIL

(TYPE A)
STANDARD WHEELCHAIR RAMP
WITH DETECTABLE WARNING
CONSTRUCTION DETAIL FOR STREETS
WITH COMBINED CURB & GUTTER

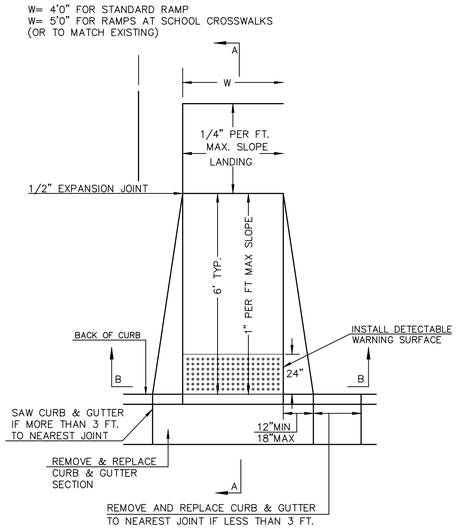

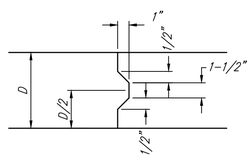

KEYWAY DETAIL

6" x 12" W4XW4 WIRE FABRIC REINFORCING SHALL BE PLACED SUCH THAT THE WIRES WITH THE 6" SPACING WILL RUN PARALLEL WITH THE LONGITUDINAL JOINT.

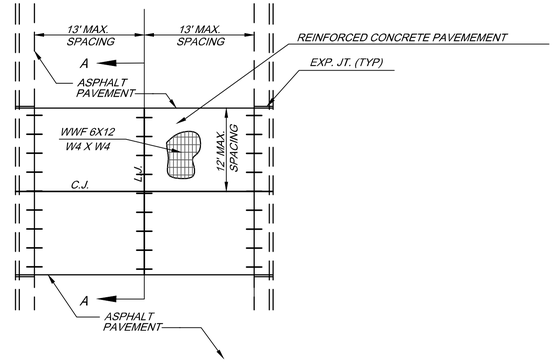

PLAN

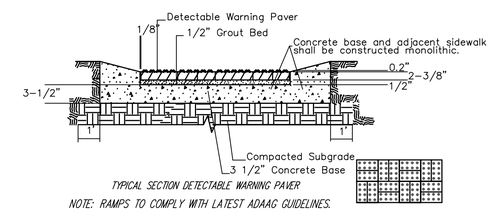

TYPICAL SECTION DETECTABLE WARNING PAVER

NOTE: RAMPS TO COMPLY WITH LATEST ADAAG GUIDELINES. PAVESTONE DETECTABLE WARNING PAVERS (OR AN APPROVED EQUAL) SHALL BE USED IN ALL WHEELCHAIR RAMPS. THE RED PAVER SHALL BE INSTALLED USING A BASKET WEAVE/PARQUET PATTERN. OTHER PATTERNS MAY BE USED WITH APPROVAL OF ENGINEER. SAND FILL JOINTS. ALIGN DOMES IN THE DIRECTION OF PEDESTRIAN TRAVEL.

SECTION B-B

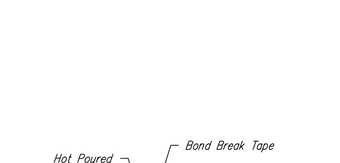

CONTRACTION JOINT DETAIL (C.J.)

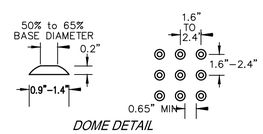

DOME DETAIL

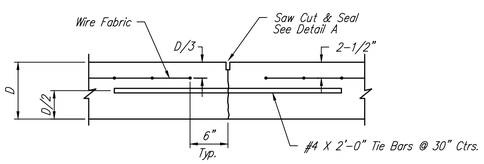

LONGITUDINAL JOINT DETAIL (L.J.)

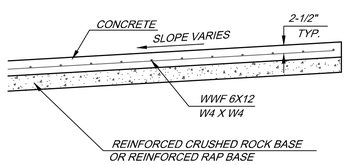

SECTION A-A

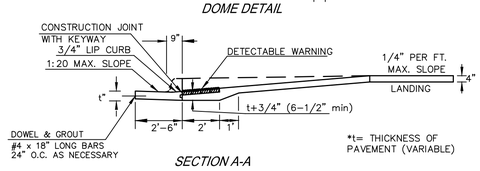

SECTION A-A

GARVER

© 2018 GARVER, LLC
THIS DOCUMENT, ALONG WITH THE IDEAS AND DESIGNS CONVEYED HEREIN, SHALL BE CONSIDERED INSTRUMENTS OF PROFESSIONAL SERVICE AND ARE PROPERTY OF GARVER, LLC. ANY USE, REPRODUCTION, OR DISTRIBUTION OF THIS DOCUMENT, ALONG WITH THE IDEAS AND DESIGN CONTAINED HEREIN, IS PROHIBITED UNLESS AUTHORIZED IN WRITING BY GARVER, LLC OR EXPLICITLY ALLOWED IN THE GOVERNING PROFESSIONAL SERVICES AGREEMENT FOR THIS WORK.

8535 E. 21st Street North
Suite 130
Wichita, Kansas 67206

REV.	DATE	DESCRIPTION	BY

CITY OF WICHITA
WICHITA.GOV

CITY OF WICHITA
KANSAS

FOUNTAIN BOX
REPLACEMENT

Concrete
Pavement
Details

JOB NO.: 19T41013
DATE: MAY 2019
DESIGNED BY: KWL
DRAWN BY: KWL

BAR IS ONE INCH ON ORIGINAL DRAWING
0 1"
IF NOT ONE INCH ON THIS SHEET, ADJUST SCALES ACCORDINGLY.

DRAWING NUMBER
.

SHEET NUMBER 8 OF 9

File: L:\2019\19T41013 - Fountain Box Plan Review\Drawings\C3D\3886D Fountain Engineering Base.dwg Last Save: 6/7/2019 8:43 AM Last saved by: KWLee
Last plotted by: Lee, Ken W. Plot Style: ---- Plot Scale: 1:2.5849 Plot Date: 6/10/2019 7:20 AM Plotter used: None