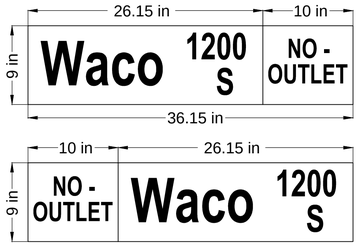

High Intensity Prismatic Yellow
Black Letters

3 INCH TEXT HWY D FONT

3 INCH TEXT HWY D FONT

4.5 inch lower case text HWY D font
6 INCH UPPER CASE TEXT HWY D FONT

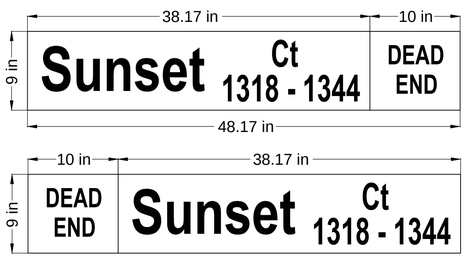

High Intensity Prismatic Yellow
Black Letters

3 INCH TEXT HWY D FONT

3 INCH TEXT HWY D FONT

4.5 inch lower case text HWY D font
6 INCH UPPER CASE TEXT HWY D FONT

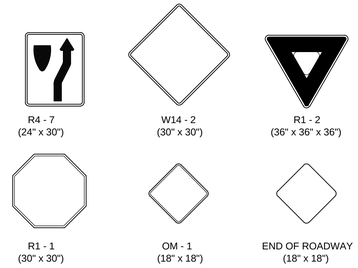

* IN NO CASE SHALL THE SPECIFICATIONS BE LESS THAN REQUIRED BY THE CURRENT MUTCD.

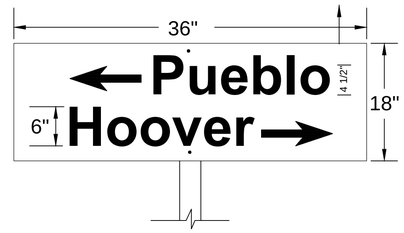

FLAT PLATE STREET NAME SIGN

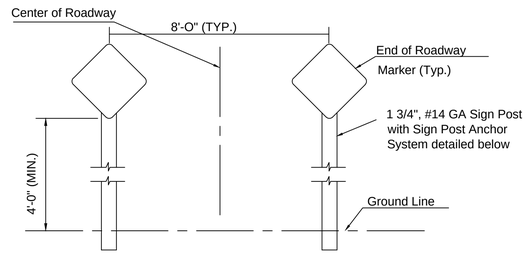

TYPICAL END OF ROADWAY SIGN MOUNTING INSTALLATION

PERFORATED TUBE SIGN POST INSTALLATION

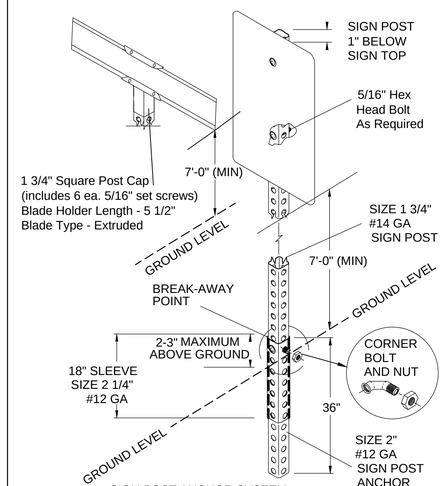

SIGN POST ANCHOR SYSTEM

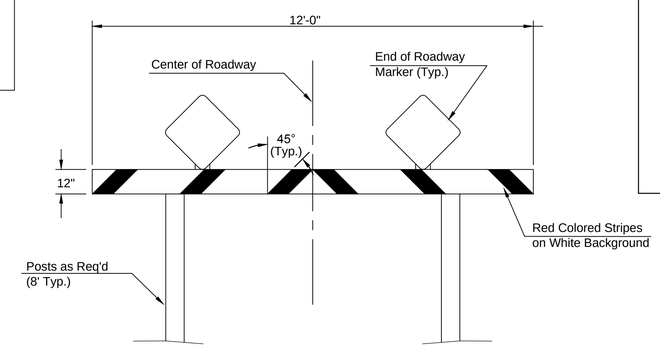

TYPE I BARRICADE DETAIL W/ E.O.R. MARKERS

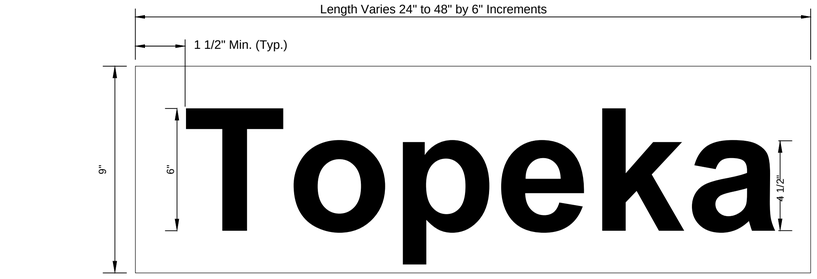

DETAIL A
9" STANDARD

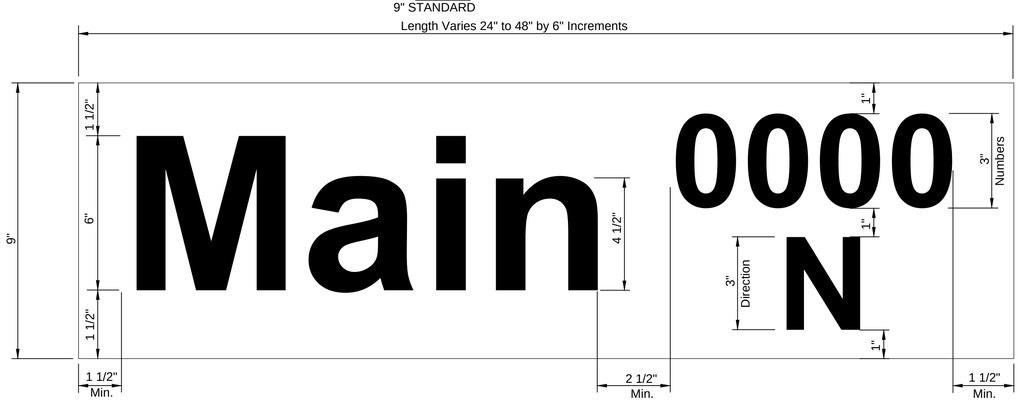

DETAIL B
9" METRO

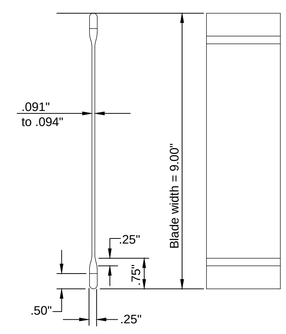

STREET NAME SIGN
BLADE DETAILS

SIGN ASSEMBLY TABLE

STATION	OFFSET	SIGN	QUANTITY
3+40	4' Lt & Rt	EOR	2*
3+48	23' Rt.	SNS	1
5+91	23' Rt.	SNS	1