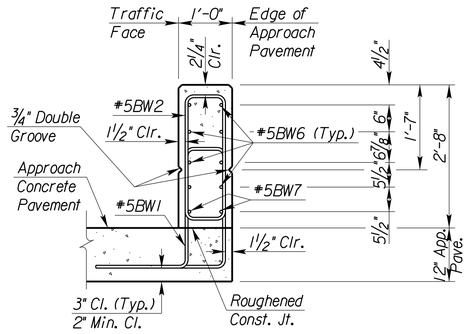

SECTION A-A

(At start of Concrete Safety Barrier and end of Bridge Corral Rail.)

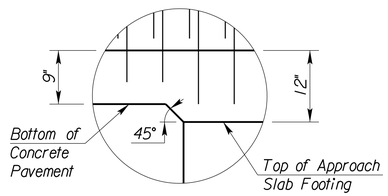

Detail "A"

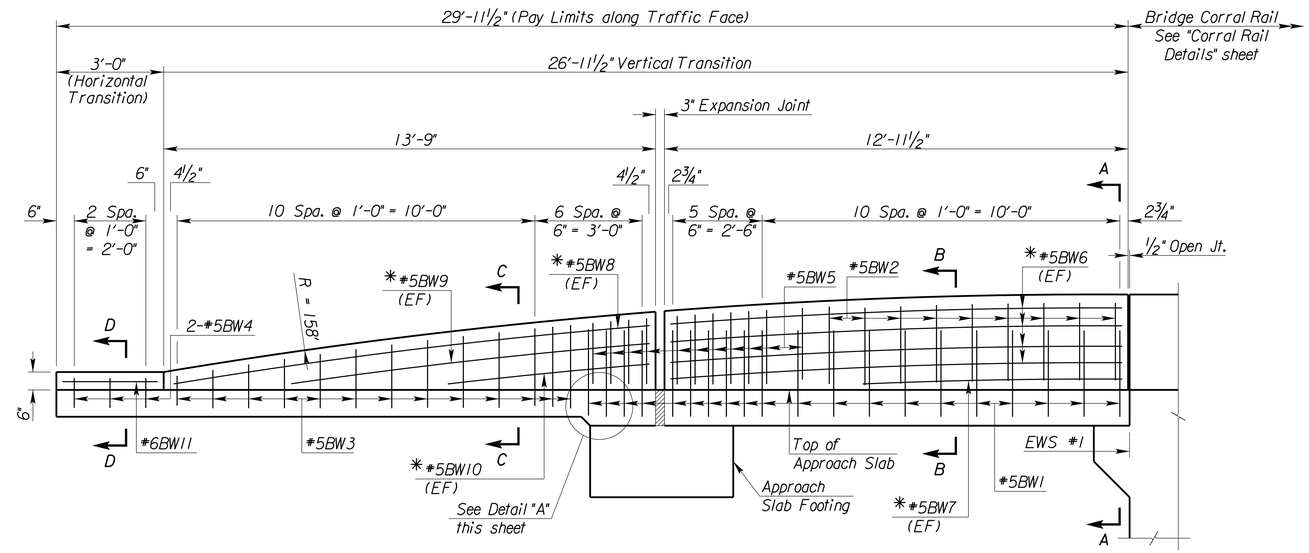

NORTHWEST CONCRETE SAFETY BARRIER ELEVATION

(Along Traffic Face)

(All vertical bars are spaced along radial lines.)

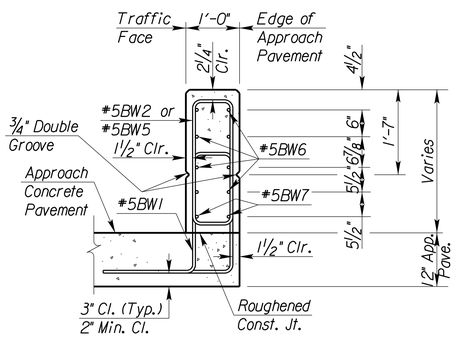

SECTION B-B

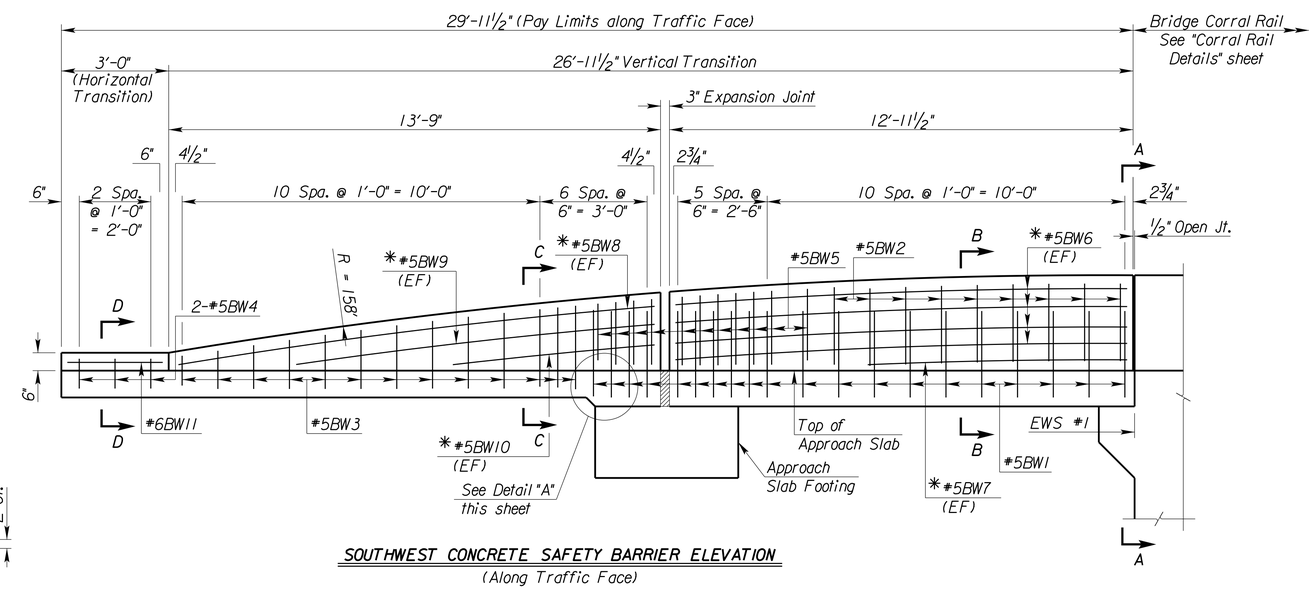

SOUTHWEST CONCRETE SAFETY BARRIER ELEVATION

(Along Traffic Face)

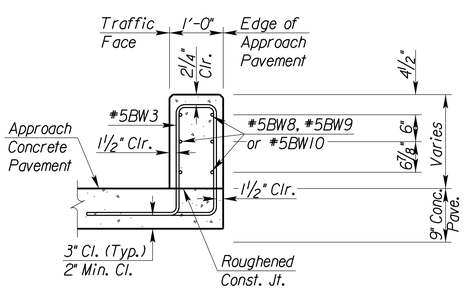

SECTION C-C

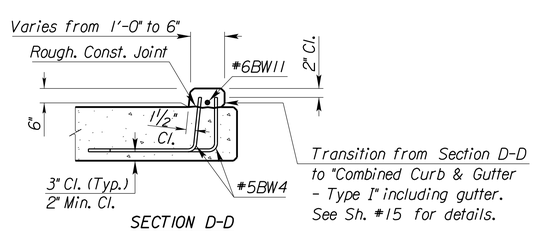

SECTION D-D

LEGEND

EF = Each Face

* Field bend bar

See Sh. #79 for Corral Rail Details.

CITY OF WICHITA

wsp

HARRY STREET BRIDGE
OVER ARKANSAS RIVER

CONCRETE SAFETY BARRIER DETAILS II

STRUCTURE NO. 43040087630AR40

NO.	DATE	DESCRIPTION
		REVISIONS

PROJ NO:	35838B
SCALE:	AS NOTED
DATE:	.
DESIGNED BY:	--
DRAWN BY:	--
CHECKED BY:	-
YEAR:	2019

SHEET NO 23

SHEET 23 OF 135

Plotted : 10/3/2019 2:12:04 PM File : T:\35838A-COW_HarryStBridge\Cadd\Sheets\Structures\838CSB02.dgn