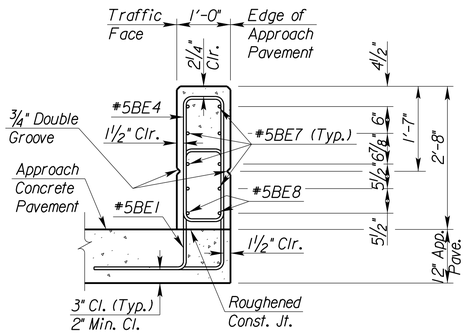

SECTION A-A

(At start of Concrete Safety Barrier and end of Bridge Corral Rail.)

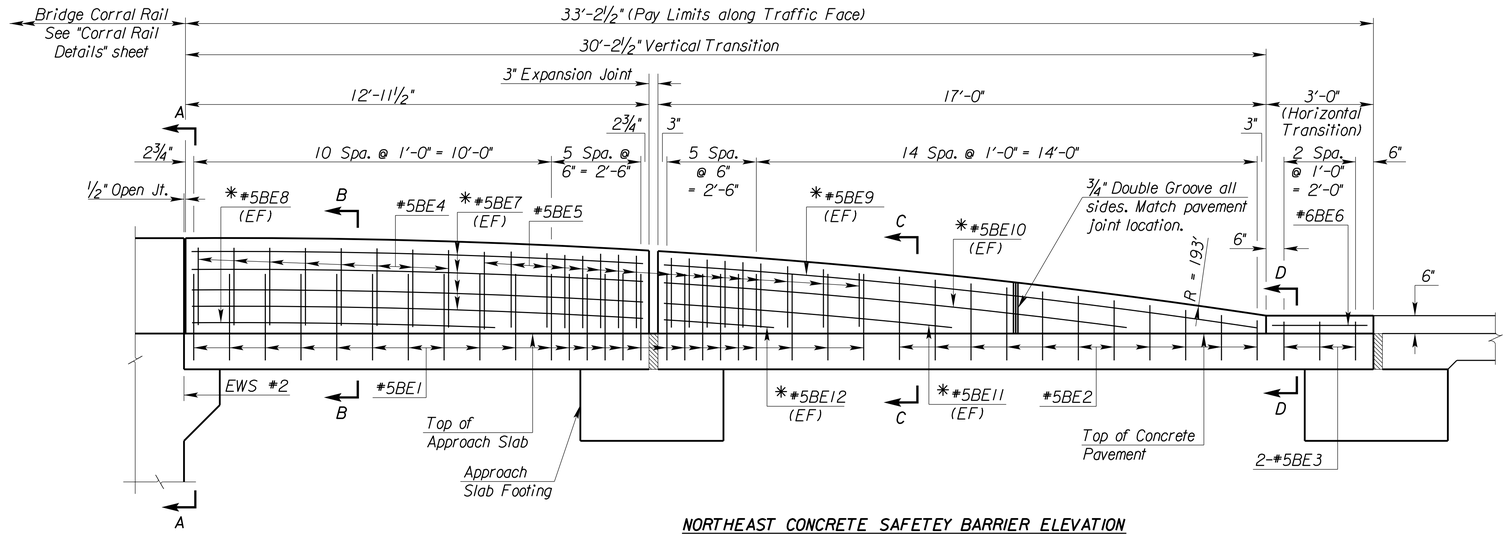

NORTHEAST CONCRETE SAFETEY BARRIER ELEVATION

(Along Traffic Face)
(All vertical bars within the limits of the curved barrier portion are spaced along radial lines.)

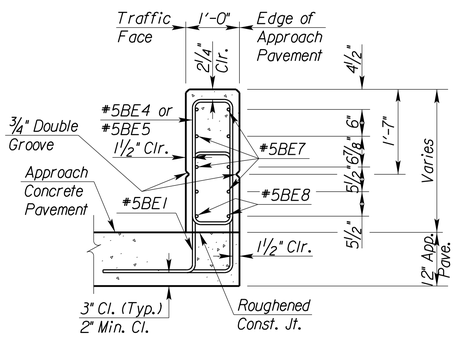

SECTION B-B

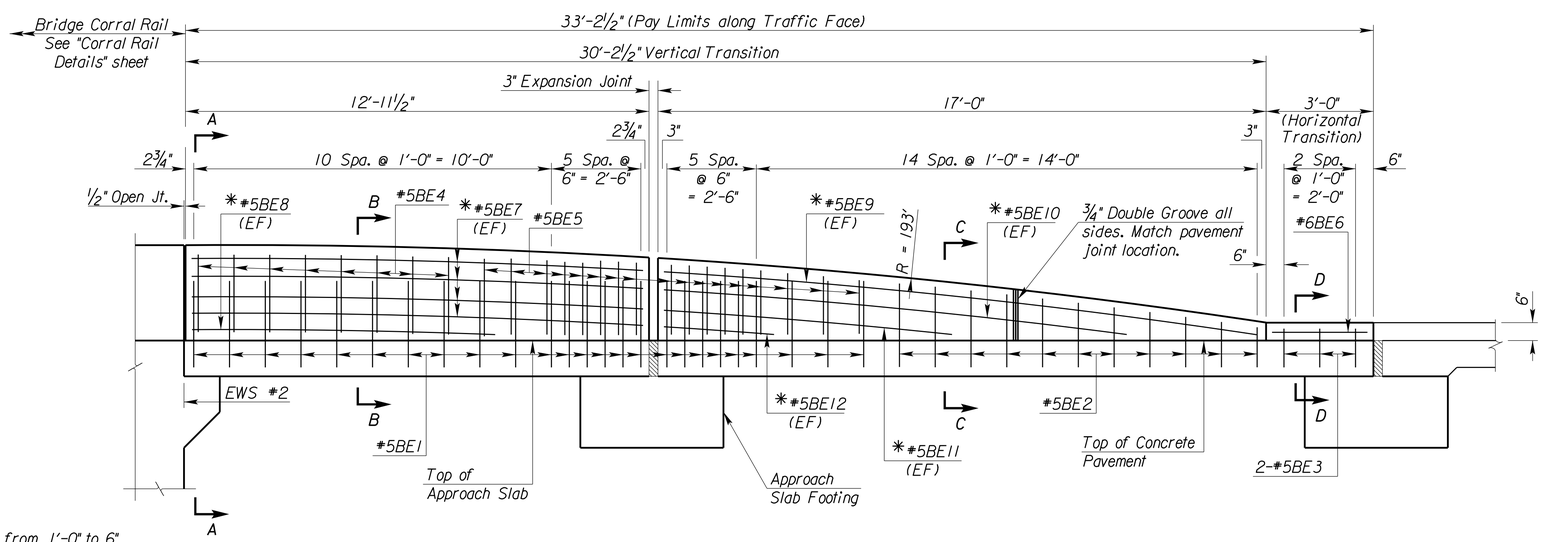

SOUTHEAST CONCRETE SAFETEY BARRIER ELEVATION

(Along Traffic Face)
(All vertical bars within the limits of the curved barrier portion are spaced along radial lines.)

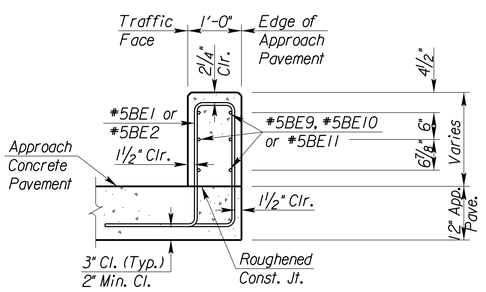

SECTION C-C

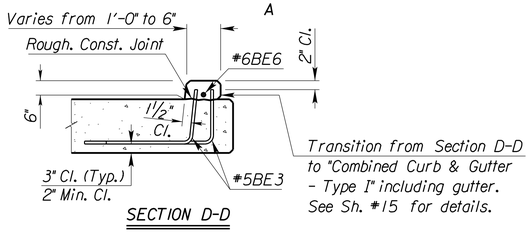

SECTION D-D

LEGEND

EF = Each Face

*Field bend bar

See Sh. #79 for Corral Rail Details.

CITY OF WICHITA

wsp

HARRY STREET BRIDGE
OVER ARKANSAS RIVER

CONCRETE SAFETY BARRIER DETAILS III

STRUCTURE NO. 43040087630AR40

NO.	DATE	DESCRIPTION
		REVISIONS

PROJ NO:	35838B
SCALE:	AS NOTED
DATE:	.
DESIGNED BY:	--
DRAWN BY:	--
CHECKED BY:	-
YEAR:	2019

SHEET NO 24

SHEET 24 OF 135

Plotted : 10/3/2019 2:12:09 PM File : T:\35838A-COW_HarryStBridge\Cadd\Sheets\Structures\838CSB03.dgn