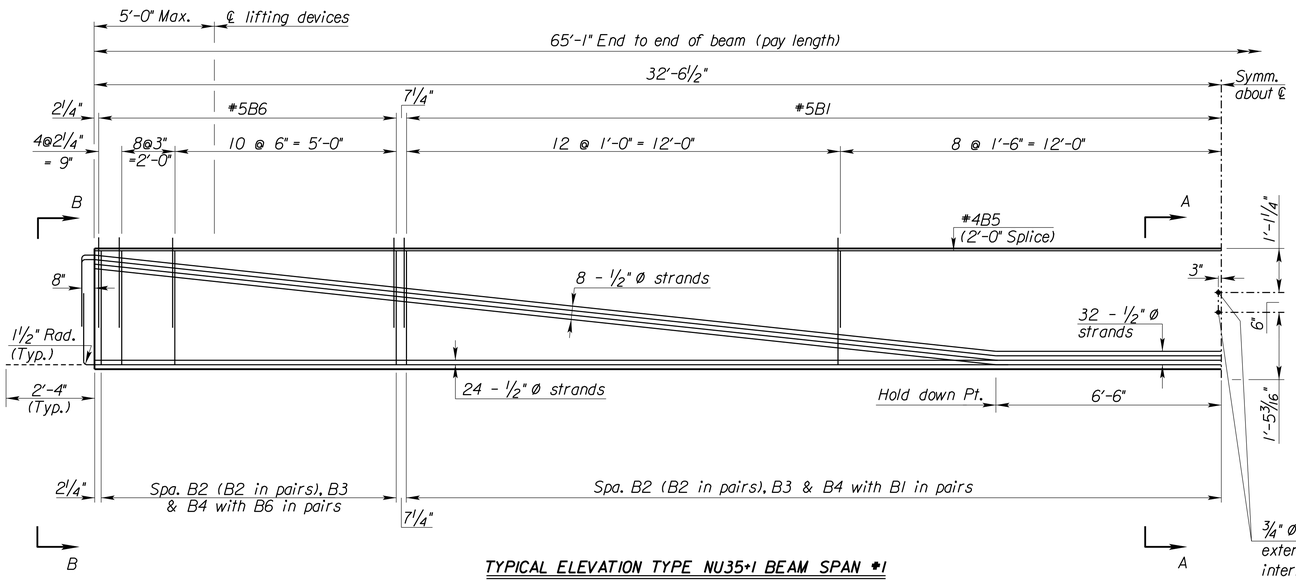

TYPICAL ELEVATION TYPE NU35+1 BEAM SPAN #1

¾" Ø Open coil insert, interior face of exterior girders. 1" Ø formed holes at interior girders only. See "Framing Plan" sheets for location of inserts for Intermediate Diaphragms.

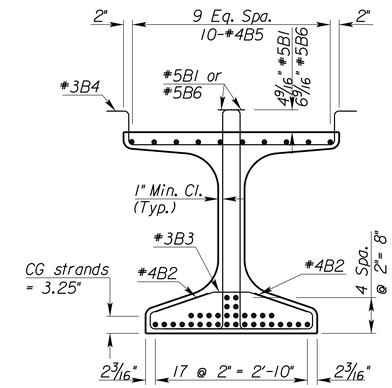

SECTION A-A

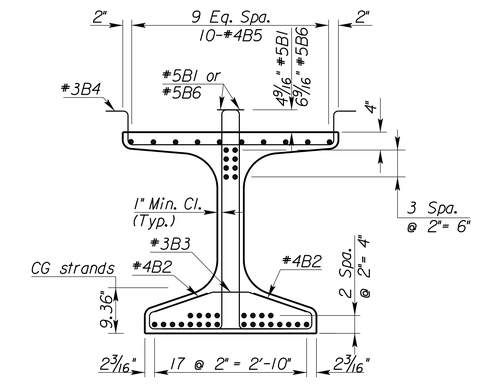

SECTION B-B

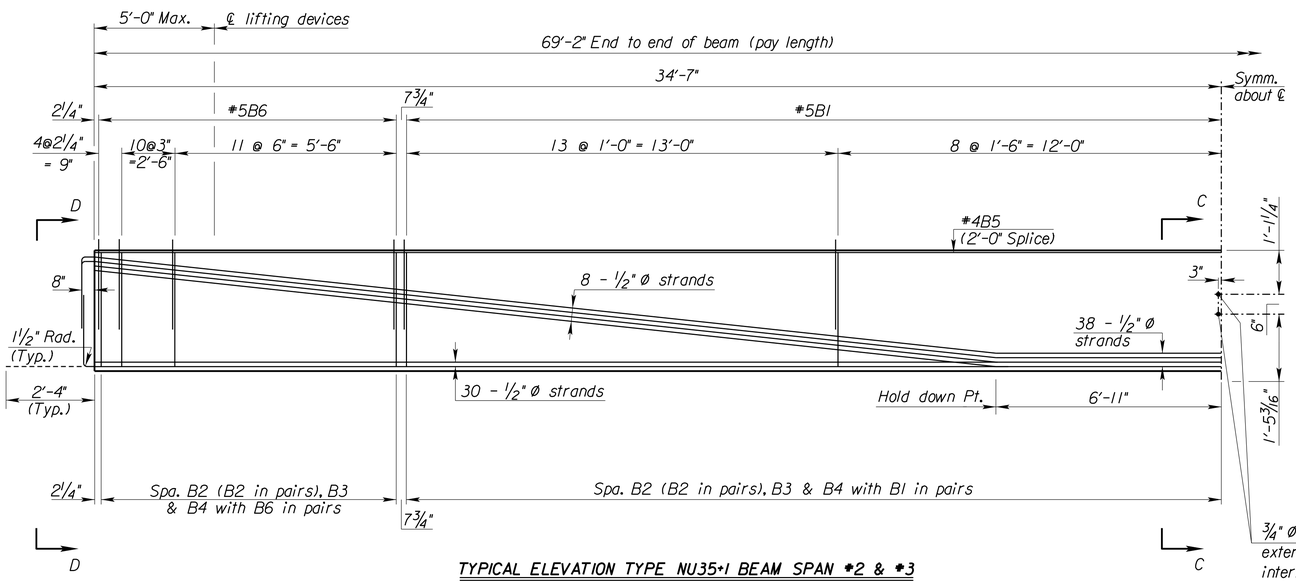

TYPICAL ELEVATION TYPE NU35+1 BEAM SPAN #2 & #3

¾" Ø Open coil insert, interior face of exterior girders. 1" Ø formed holes at interior girders only. See "Framing Plan" sheets for location of inserts for Intermediate Diaphragms.

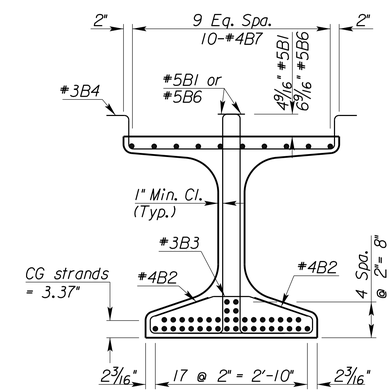

SECTION C-C

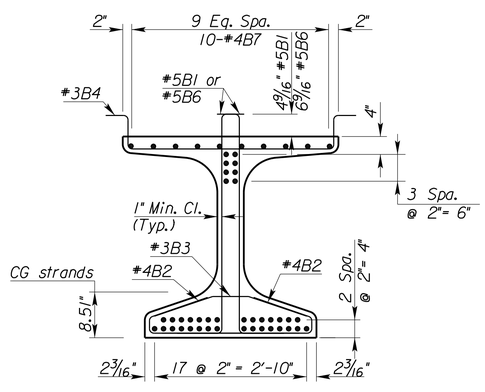

SECTION D-D

CITY OF WICHITA

wsp

HARRY STREET BRIDGE
OVER ARKANSAS RIVER

BEAM DETAILS I

STRUCTURE NO. 43040087630AR40

NO.	DATE	DESCRIPTION
REVISIONS		

PROJ NO:	35838B
SCALE:	AS NOTED
DATE:	.
DESIGNED BY:	--
DRAWN BY:	--
CHECKED BY:	-
YEAR:	2019

SHEET NO
59
SHEET 59 OF 135

Plotted : 10/3/2019 2:14:33 PM File : T:\35838A-COW_HarryStBridge\Cadd\Sheets\Structures\838BDT2.dgn