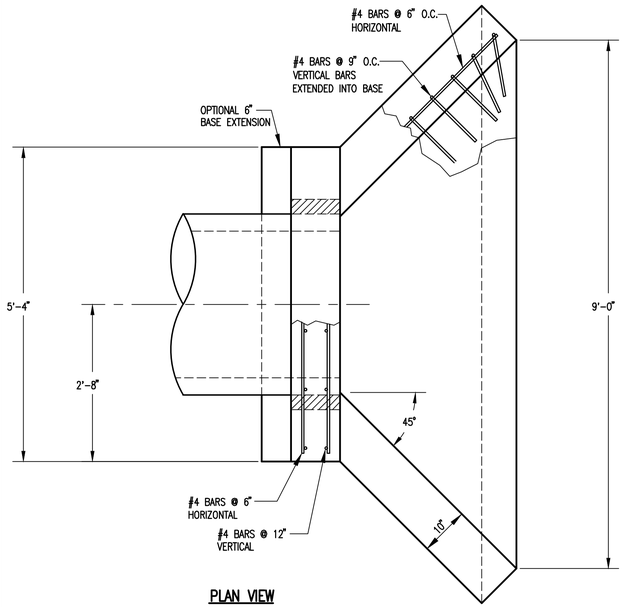

PLAN VIEW

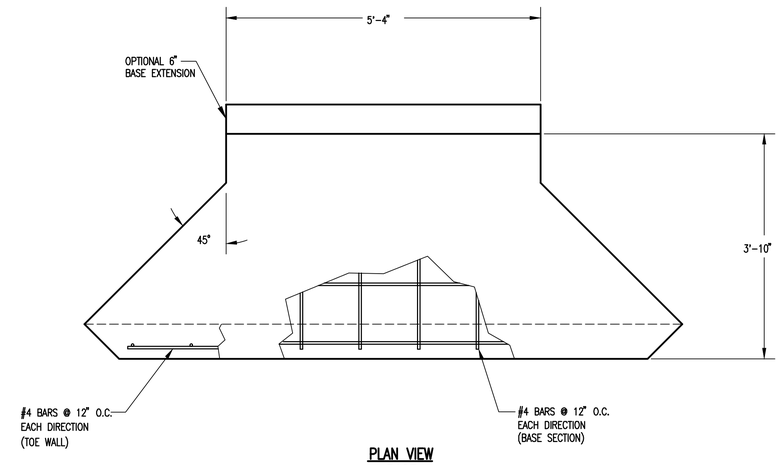

PLAN VIEW
BASE

PIPE ø	A	B	BLOCKOUT ø
30"	2'-1"	1'-3"	3'-7"
36"	2'-4"	1'-6"	4'-2"

SOIL SAVER DIMENSION TABLE

SWS LINE	WIDTH	HEIGHT
1	2'-0"	2'-5 1/2"
2	1'-0"	1'-0"

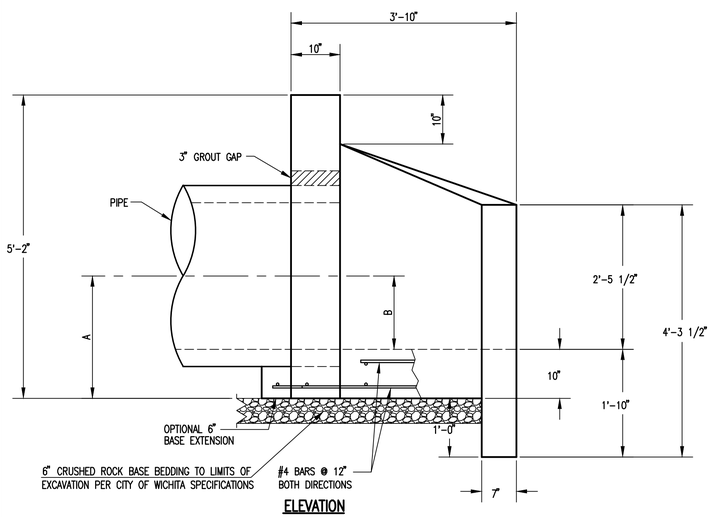

ELEVATION

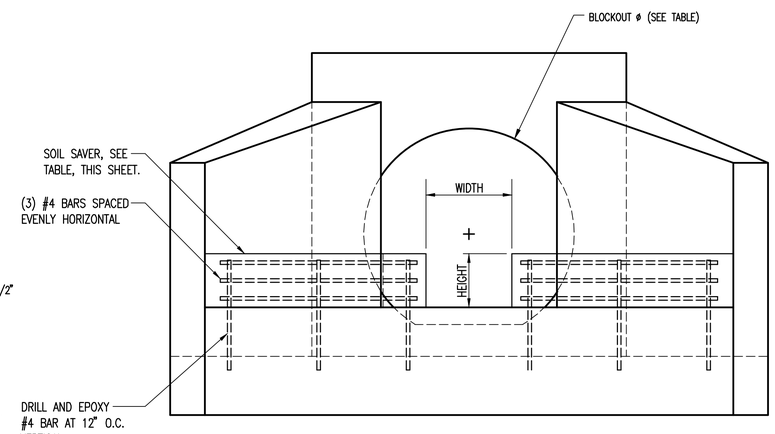

FRONT VIEW

HEADWALLS, AS SHOWN, WILL NOT SUPPORT FLAP GATE.

REVISED: MARCH 2015

CITY OF WICHITA
PUBLIC WORKS & UTILITIES
ENGINEERING DIVISION

HEADWALL
DETAILS FOR
30" AND 36" PIPE

CITY ENGINEER
GARY JANZEN, P.E.

PROJECT NUMBER	OCA NUMBER	DATE
468-2019-085434	751600	

CITY ENGINEER'S OFFICE
CITY HALL - SEVENTH FLOOR
455 NORTH MAIN STREET
WICHITA, KANSAS 67202-1620
(316) 268-4501

SHEET

SW-403

PEC
PROFESSIONAL ENGINEERING CONSULTANTS
303 SOUTH TOPEKA
WICHITA, KS 67202
316-262-2691 www.pec1.com

CITY OF WICHITA

JOSHUA GOLKA
LICENSED
24136
11/15/2019
KANSAS
PROFESSIONAL ENGINEER

STORM DRAIN NO. 463
TO SERVE
THE VILLAS AT OAK CREEK

GARY JANZEN, P.E. - CITY ENGINEER
CITY OF WICHITA PROJECT NO. 468-2019-085434

Issue:

JOB NO.	35-170551-001-0042
DATE	NOVEMBER 2019
PM	JAG
DESIGNED BY	JAG
DRAWN BY	CSL, KTD
CHECKED BY	CSB

HEADWALL DETAILS FOR 30
AND 36 INCH PIPE

C108

Saved 11-13-2019 8:39:16 AM by KURTIS.DEKAT
Plot Scale 1:1 11-15-2019 9:17:33 AM by KURTIS.DEKAT
J:\Wichita-Civil\2017\170551\001\Main\Drawings\170551-001-C108-HEADWALL DETAILS FOR 30 AND 36 INCH PIPE