STATE	PROJECT NO.	YEAR	SHEET NO.	TOTAL SHEETS
KANSAS	87 TE-0451-01	2018	53	222

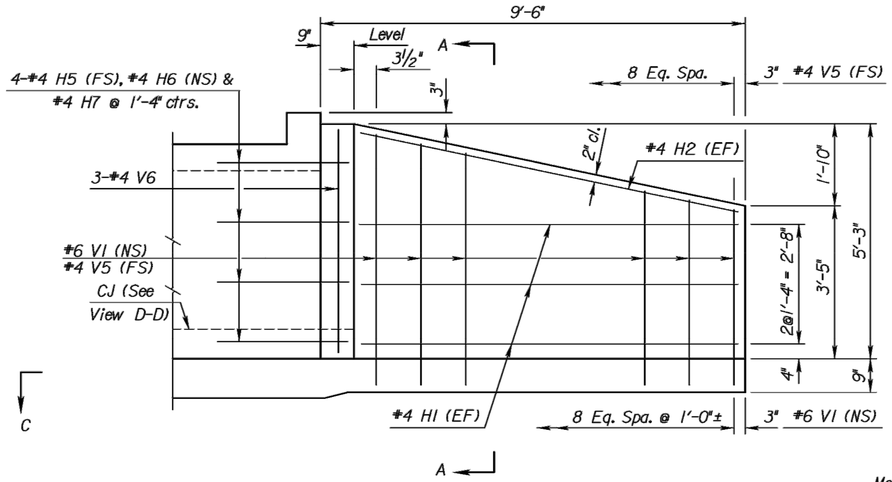

ELEVATION OF WINGWALL

(Backface Shown)

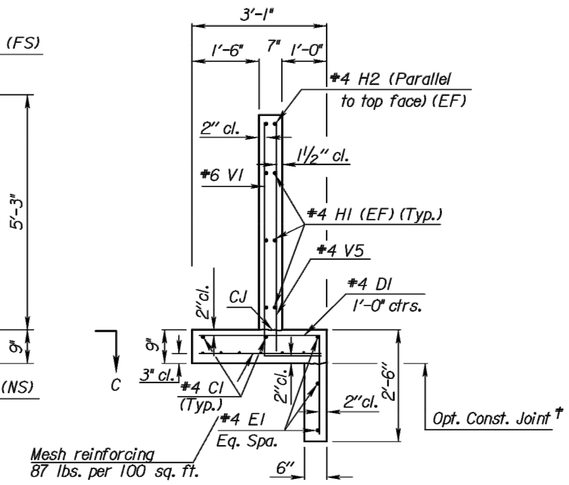

SECTION A-A

See "RCB Aux. Details" sheet for additional requirements.

Typical both wings

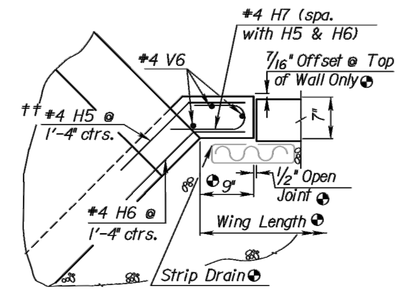

WINGWALL JOINT DETAIL

(Plan View)

† NOTE: Const. Jt. may be used at Contractor's option when approved by the Engineer. D1 bars or mesh may be spliced thus: ⌐ Minimum overlap shall be 1'-3". No increase in quantities or cost shall be allowed when Contractor elects this option.

GENERAL NOTES

DESIGN SPECIFICATION: AASHTO LRFD Spec., 2007 Ed., 2009 Int.
DESIGN LOADING: HL93
UNIT STRESSES: Grade 4.0 Concrete; f'c = 4,000 p.s.i.
Reinforcing Steel; fy = 60,000 p.s.i.
CONCRETE: Grade 4.0 Concrete shall be used throughout. Bevel all exposed edges with a 3/4" triangular moulding.
REINFORCING: All reinforcing shall conform to ASTM A615, Grade 60. Welded Wire Fabric shall conform to ASTM A185. All dimensions relative to reinforcing steel shall be to center-line of bar unless otherwise noted. Wire Reinforcing mesh shall be electrically welded and shall be composed of 6 x 6- W6 x W6 welded wire fabric and shall be classified as pounds of reinforcing and included in the total quantity for the bid item Reinforcing Steel (Gr. 60)
QUANTITIES: Wingwall Quantities include all quantities outside the neat lines of the box, excluding the hubguard.
APRON: A 5" concrete slab shall be constructed between the downstream wings in locations subject to scour only when specified on the plans or by the Engineer.
BACKFILL MATERIAL: Use Granular Backfill material meeting the requirements of SB-1, SB-2, SCA-1, SCA-2.
Backfill all wings to limits shown on the "RCB Auxiliary Sheet".
FILTER FABRIC: Separate in-situ material from granular backfill with approved filter fabric complying with Section 1710.
Filter Fabric is subsidiary to "Granular Backfill".
FOUNDATION STABILIZATION: Use Foundation Stabilization on all wingwalls unless founded on rock or granular material.

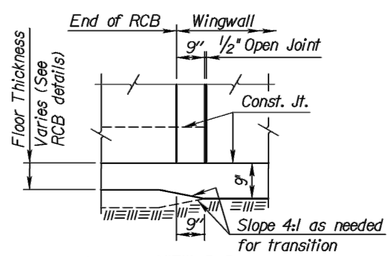

VIEW D-D

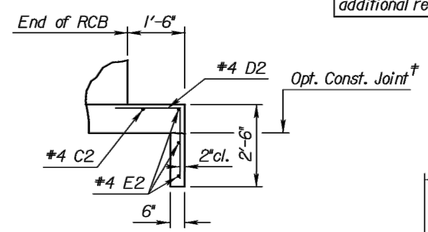

SECTION E-E

NOTE:
EF = Each Face
NS = Near Side
FS = Far Side
CJ = Const. Joint

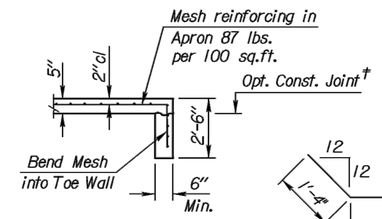

SECTION B-B

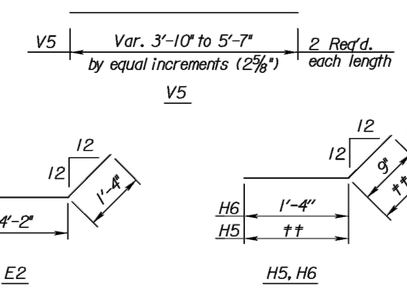

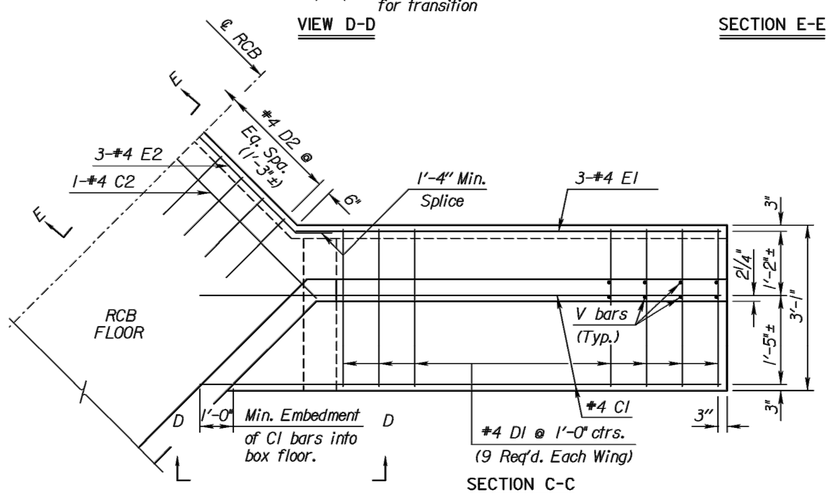

SECTION C-C

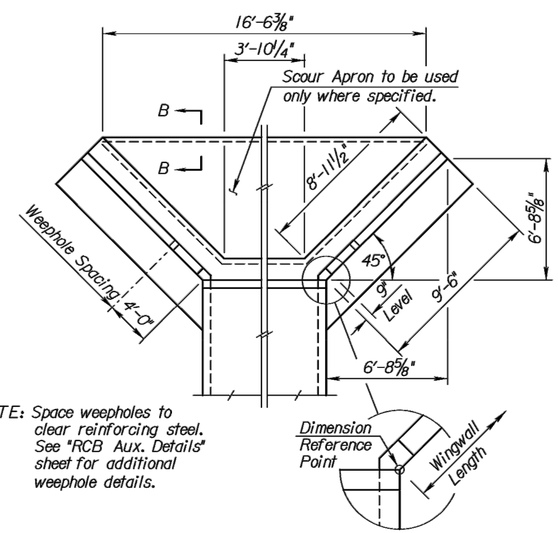

NOTE: Space weepholes to clear reinforcing steel. See "RCB Aux. Details" sheet for additional weephole details.

WING DIMENSIONS FOR NORMAL BOX

(3 1/2:1 Embankment Slope)

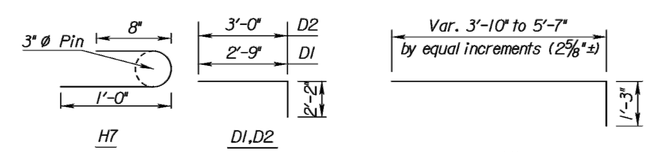

BENDING DIAGRAM

(All dimensions are out to out of bars.)

†† Bend in Field

Quantities listed below are included in the Summary of Quantities shown on the RCB details.

WINGWALL QUANTITIES (One End Only)	Foundation Stabilization		Concrete (Gr. 4.0)	
Wingwalls	1.80	(C.Y.)	4.40	(C.Y.)
Apron	0.00	(C.Y.)	0.00	(C.Y.)
Soil Saver	0.00	(C.Y.)	0.00	(C.Y.)
Reinforcing Steel (Gr. 60)			510	Lbs.
Welded Wire Fabric (Wings)			51	Lbs.
Welded Wire Fabric (Apron)			0	Lbs.
Granular Backfill (Wingwalls)			12.00	C.Y.
Filter Fabric (subsidiary)			18.00	S.Y.

NOTE: Reinforcing Bar List is for both wings at one end of box only.

* See Bending Diagram

0° Skew		#4C1	#4D1	#4E1	#4C2	#4D2	#4E2	#6V1	#4H1	#4H2	#4H5	#4H6	#4H7	#4V5	#4V6
	No.	4	18*	6	1	3 *	3*	18	12	4	8 *	8*	8*	18	6
	Length	11'-7"	4'-11"	8'-9"	5'-0"	5'-2"	6'-10"	*	8'-4"	8'-6"	1'-10"	2'-1"	1'-9"	*	5'-0"

NO.	DATE	REVISIONS	BY	APP'D
3				
2				
1				

KANSAS DEPARTMENT OF TRANSPORTATION

Sta. 166+81.33

FLARED WINGWALLS
4 †† Rise (0°SKEW)

BR 10.00.04 Sedgwick Co.

FHWA APPROVAL	10-20-10	APP'D	Terry L. Fleck
DESIGNED	DETAILED	QUANTITIES	CADD
DESIGN CK.	DETAIL CK.	QUAN. CK.	CADD CK.

Plotted By: Judith
Plot Location:
File: 2018-9-6_472-85360_1-4x4A.dgn
Plot Date: 07-SEP-2018 13:15