STATE	PROJECT NO.	YEAR	SHEET NO.	TOTAL SHEETS
KANSAS	87 TE-0451-01	2018	82	222

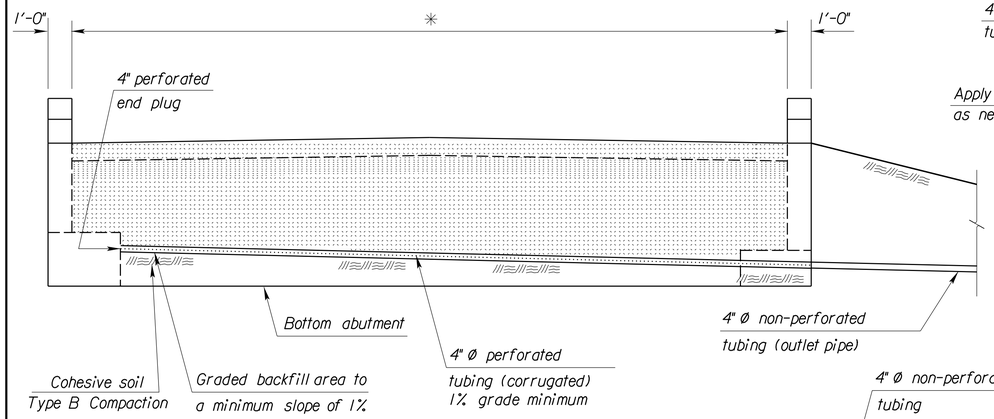

ELEVATION

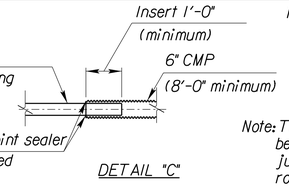

DETAIL "C"

Note: Place the CMP flowline 1'-0" above ditch flowline, toe of sideslope, or as shown on the "Construction Layout" sheet.

Note: The 1'-0" lap and joint sealer may be replaced by a reducing coupler at the junction of the CMP and the 4" round tubing.

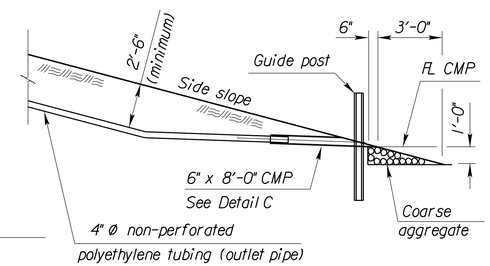

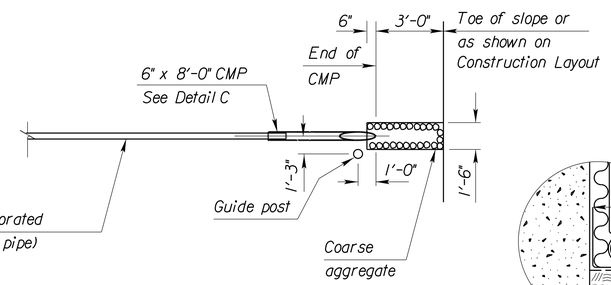

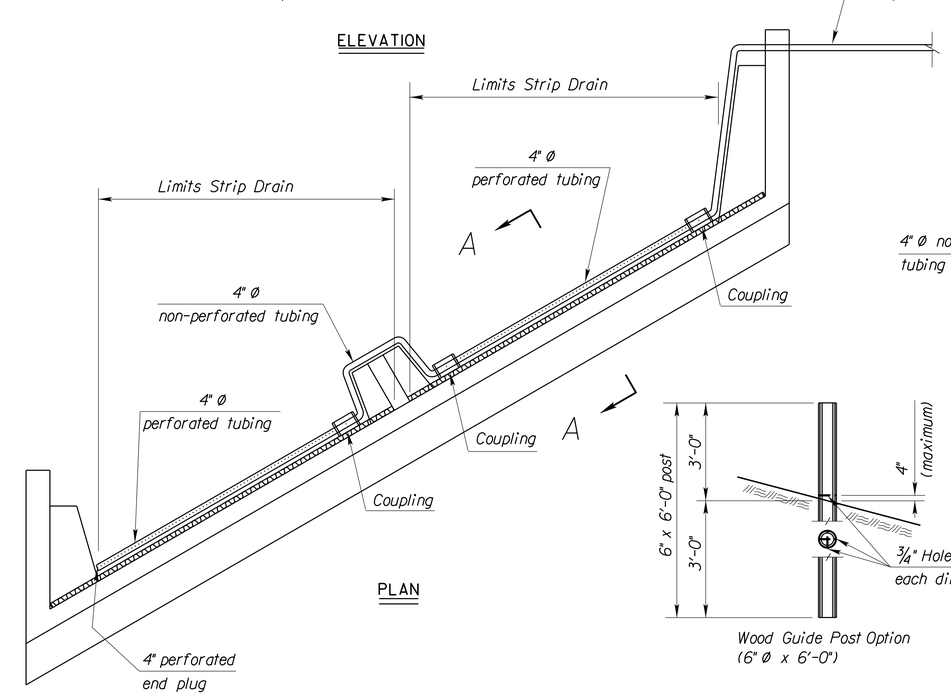

PLAN

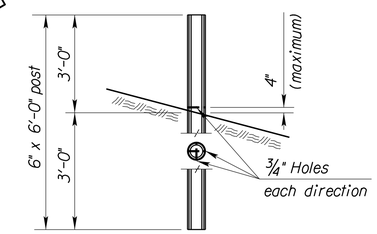

Wood Guide Post Option (6" Ø x 6'-0")

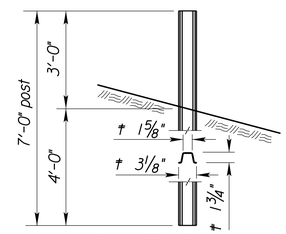

Metal Guide Post Option 7'-0" at 3.0 lbs/ft. flanged channel

† Nominal dimension.

GUIDE POST

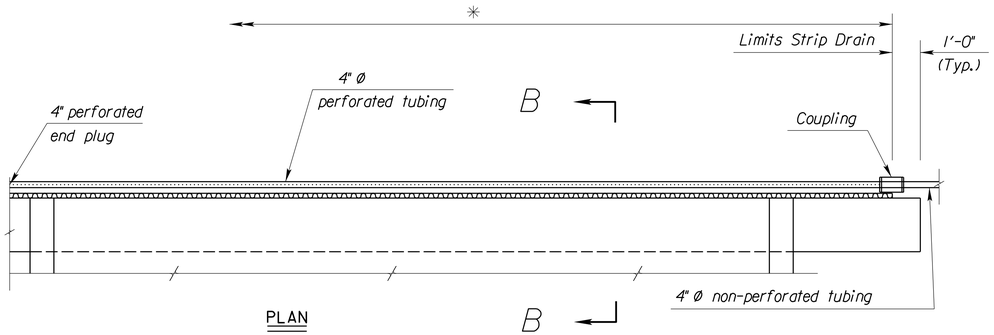

PLAN

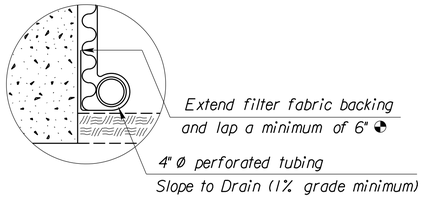

DETAIL B

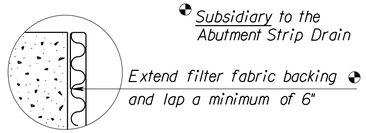

DETAIL A

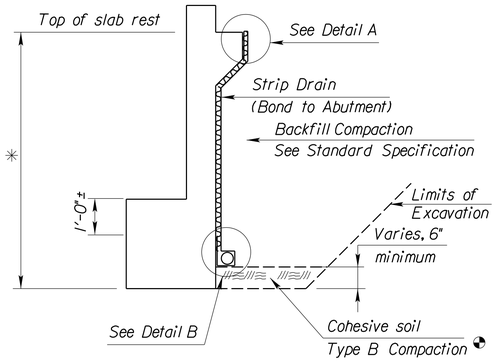

SECTION A-A

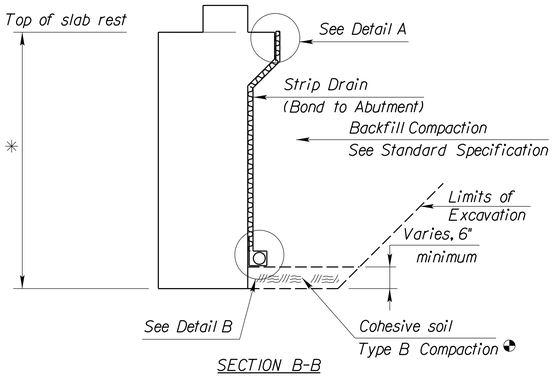

SECTION B-B

GENERAL NOTES

ABUTMENT STRIP DRAIN: The Bridge Contractor shall excavate to the limits shown on the Bridge Excavation sheet, grade the bottom of the backfill area, place the strip drain, and place the perforated pipe, the outlet pipe, the CMP, and the backfill. Guide post and coarse aggregate are subsidiary to this bid item. Guide post and coarse aggregate are not required if the CMP empties onto riprap.

BRIDGE BACKWALL PROTECTION SYSTEM: Apply a Bridge Backwall Protective System to the approach side of the abutments and the wings in accordance with KDOT Specifications and the manufacturer's recommendations. Cover the abutments and wings to the limits shown on the details. Prior to backfilling, repair any damage done to the system at no charge to the state.

Place perforated pipe next to the strip drain. Use non-perforated pipe outside the limits of the strip drain. Enclose the perforated pipe with the extension of the filter fabric.

Compact the abutment backfill. See the KDOT Specifications.

Perforated pipe and non-perforated outlet pipe shall be corrugated polyethylene tubing conforming to the KDOT Specifications.

Fit the CMP end section with 1/4" galvanized mesh screen to prevent the entrance of rodents. Seal the joint between the outlet pipe and the end section with a joint sealer. Place coarse aggregate at the outlet end as shown.

Grade the bottom surface of the excavated area to drain. Backfill this area with a cohesive type soil. The soil should be a silty clay or clay under the Kansas Classification System with a minimum plasticity index of 13. Compact the material to Type B standards.

Place the outlet pipe on the downstream side of structures over streams and as shown or noted on other crossings (See the "Construction Layout" sheet).

Notes:

Wood Guide Posts: Apply a preservative treatment conforming to the KDOT Specifications to the posts. Use only one type of preservative treatment on a project. Apply two coats of aluminum paint to the top 18" of the posts. Apply one coat of International Orange paint to the top 12" of the posts. State forces will apply reflectorized material.

Metal Guide Posts: Posts shall conform to the KDOT Specifications. Posts shall have a galvanized or baked enamel coating. Apply one coat of International Orange paint to the top 12" of the posts.

✳ Limits of Bridge Backwall Protection System (by Bridge Contractor)

SUMMARY OF QUANTITIES	
Abutment Strip Drain	35.2 Sq. Yds.
Bridge Backwall Protection System	36.6 Sq. Yds.
Items subsidiary to Strip Drain	
4" Ø Perforated Pipe	24 Lin. Ft.
4" Ø Outlet Pipe	59 Lin. Ft.
6" Ø CMP	16 Lin. Ft.
Guide Post	2 Each

NO.	DATE	REVISIONS	BY	APP'D
3				
2	7/14/08	Change Type 'C' Compaction to 'B'	JPJ	KFH
1	4-01-04	Current release		

KANSAS DEPARTMENT OF TRANSPORTATION

Br. No. Sta. 201+52.00

ABUTMENT STRIP DRAIN

Proj. No. 472-85360 Sedgwick Co.

SHEET NO. OF	SCALE	APP'D	
DESIGNED	DETAILED	QUANTITIES	CADD
DESIGN CK.	DETAIL CK.	QUAN. CK.	CADD CK.

KDOT Graphics Certified 10-17-2014

KDOT Graphics Certified

Plotted By: $$USERNAME$$ Plot Location: $UNIT$
File: $$$$$$$$$$$$DOHSPEC$$$$$$$$$$$$$$
Plot Date: $$$$$SYTIME$$$$$$