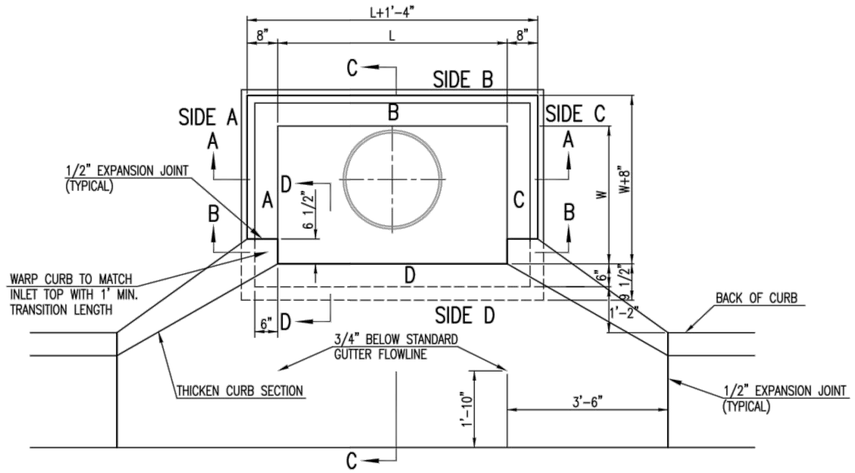


TOP VIEW

| BAR SCHEDULE | | |
|---|---|---|
| INLET OPENING | B1 BARS | SPACING |
| 5'-0" | #4 | 4" |
| 10'-0" | #6 | 3.5" |

| PRECAST CURB INLET WIDTHS | | | | |
|---|---|---|---|---|
| W | PRE-CAST TOP SIZE | | | PIPE DIA.** |
| | WIDTH | LENGTH | TOP | |
| 3'-0" | W+8" | L+1'-4" | 7 1/2" | 21" & SMALLER |
| 4'-0" | W+8" | L+1'-4" | 7 1/2" | 24" & 30" |
| 5'-0" | W+8" | L+1'-4" | 7 1/2" | 36" & 42" |
| 6'-0" | W+8" | L+1'-4" | 7 1/2" | 48" & 54" |
| 7'-0" | W+8" | L+1'-4" | 7 1/2" | 60" & 66" |

** FOR PIPES PERPENDICULAR TO INLET WALL

## GENERAL NOTES

1. CONCRETE TOPS TO BE INSTALLED ON THIN MORTAR CUSHION TO INSURE FULL SUPPORT ALONG BRICK. CONCRETE TOPS MAY BE CAST IN PLACE OR PRECAST. CONCRETE USED FOR INLET CONSTRUCTION SHALL CONFORM TO CITY OF WICHITA SPECIFICATIONS FOR CONCRETE PAVEMENT MIX.
2. CONTRACTOR SHALL HAVE THE OPTION OF CONSTRUCTING 8" BRICK MASONRY WALLS BETWEEN THE CONCRETE INLET BASE AND TOP OF THIS INLET WHEN W=5'-0" AND H=7'-0" OR LESS.
3. INLET INVERT SHALL BE SHAPED WITH 8 SACK SAND MIX CONCRETE TO CREATE FLOW CHANNELS AND TO INCREASE HYDRAULIC EFFICIENCY SUCH THAT THE INLET WILL BE SELF CLEANING BETWEEN ALL INLET AND/OR OUTLET PIPES.
4. THE ENDS OF ALL PIPES INSTALLED IN INLETS SHALL BE CUT OFF FLUSH WITH THE INSIDE FACE OF THE INLET WALL.
5. INLET FRAME AND COVER TO BE DEETER #2014, EJIW #1936-Z4, OR APPROVED EQUAL, SEE SW-303.
6. CONTRACTOR SHALL REMOVE LIFTING HOOKS AFTER INSTALLATION. RECESSES IN INLET WALL SHALL BE GROUTED FLUSH TO THE INLET WALL WITH HYDRAULIC CEMENT AFTER THE INLET IS IN PLACE. LIFTING HOLES THRU THE INLET WALL WILL NOT BE ACCEPTED.

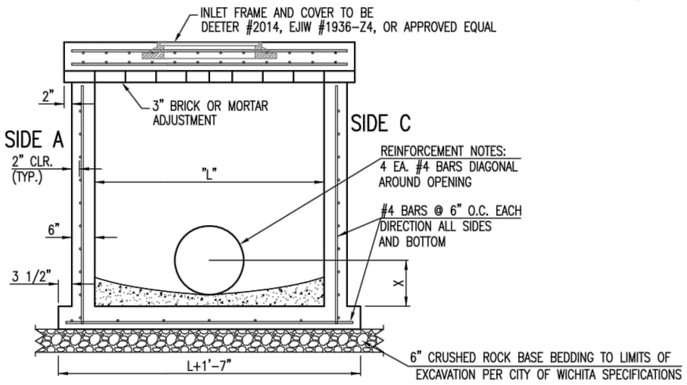


SECTION "A-A"

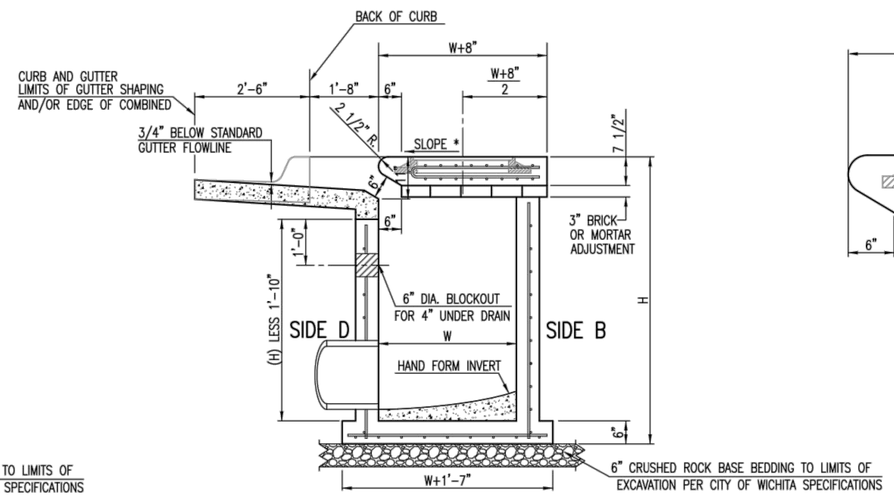


SECTION "C-C"

NOTES:
* SLOPE OF INLET TOP TO MATCH SIDEWALK OR PARKING SLOPES WITHIN LIMITS INDICATED.

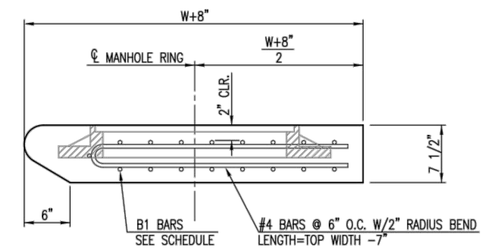


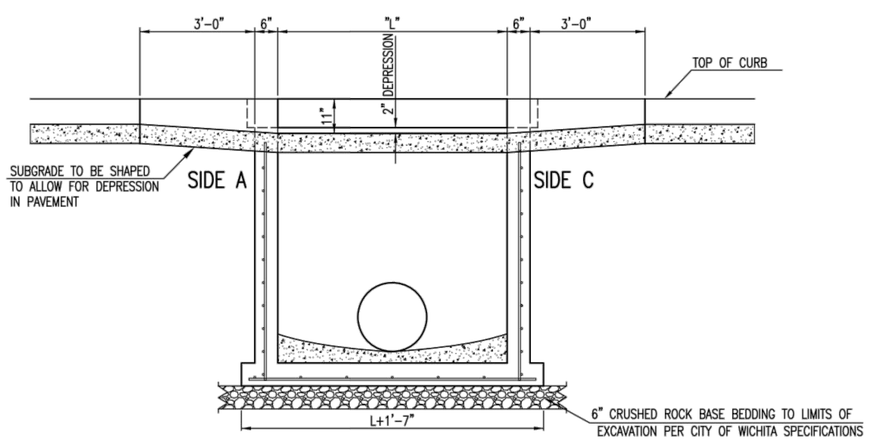


SECTION "B-B"

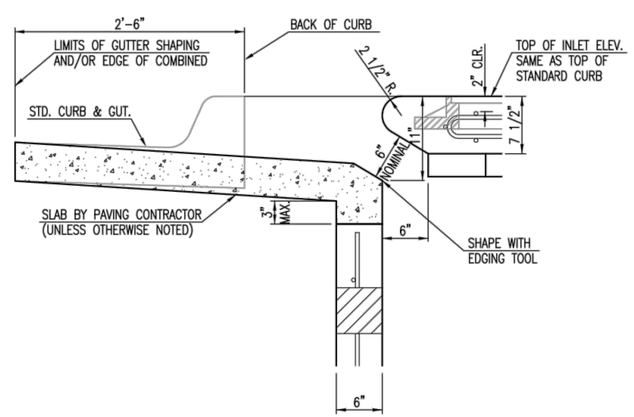


SECTION "D-D"

| REVISION MAY 2017 | UPDATED SET BACK DIMENSION ON TOP VIEW |
|---|---|

CITY OF WICHITA
PUBLIC WORKS & UTILITIES ENGINEERING DIVISION

STANDARD TYPE 1A
CURB INLET
5'-0" OR 10'-0" OPENING

CITY ENGINEER
GARY JANZEN, P.E.

| PROJECT NUMBER | OCA NUMBER | DATE |
|---|---|---|
| 472-2019-085522 | 766442 | |

CITY ENGINEER'S OFFICE
CITY HALL - SEVENTH FLOOR
455 NORTH MAIN STREET
WICHITA, KANSAS 67202-1620
(316) 268-4501

SHEET 15 / 30

SW-103