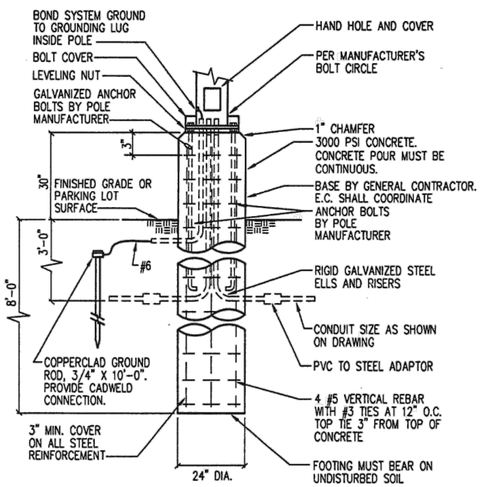

1 POLE BASE DETAIL
NO SCALE (30' MAX. POLE)

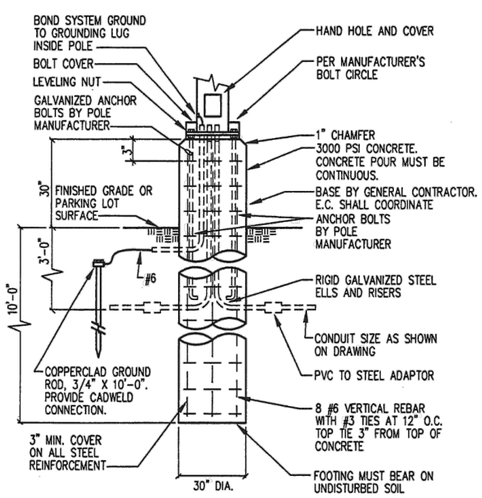

2 POLE BASE DETAIL
NO SCALE (40' MAX. POLE)

NOTES:

1. ALL MANHOLE CONSTRUCTION AND LOCATION TO BE VERIFIED AT SITE PRIOR TO CONSTRUCTION.
2. ACTUAL DIMENSION TO BE DETERMINED IN THE FIELD AND WILL DEPEND ON LOCATION OF DUCT LINES, OTHER UTILITY LINES AND ANY OTHER UNFORESEEN OBSTRUCTIONS. CONTACT ENGINEER FOR DESIGN REVIEW WHEN FIELD CONDITIONS EXCEED PARAMETERS SHOWN.
3. PROJECT SPECIFICATIONS SHALL CONTROL WHEN MORE STRINGENT THAN THESE NOTES.
4. CONTRACTOR TO FORM OPENINGS IN MANHOLE WALLS FOR CONDUIT WHERE NECESSARY. FAN WALL REINFORCING AS REQ'D BETWEEN CONDUIT OPENINGS. LOCATIONS TO BE DETERMINED IN THE FIELD.
5. LOCATE DUCT BANK PENETRATIONS TO ALLOW MAXIMUM BENDING RADIUS FOR CABLES.
6. AT CONTRACTOR'S OPTION, DEPTH OF MANHOLE SHAFT MAY BE ACCOMPLISHED W/ PRECAST PIPE OR BRICK LAYUP. PROVIDE MIN. 10" WIDE x 6" DEEP CONCRETE CURB FOR MANHOLE FRAME INSTALLATION.
7. CONCRETE – 4,000 PSI MIN. AT 28 DAYS, W/ 4% TO 6% ENTRAINED AIR.
   REINFORCING – A615, GRADE 60 (Fy= 60 KSI)
8. INTERIOR SURFACES OF WALLS AND ROOF TO BE FINISHED WITH A 1–2 SAND CEMENT MORTAR APPLIED WITH A CORK OR RUBBER FLOAT TO GIVE A SEMI–SMOOTH EVEN FINISH OF UNIFORM COLOR, AND TEXTURE, FREE OF FORM MARKS, SMALL OPENINGS AND PORES.
9. COATING SPECIFIED IN NOTE 8 WILL NOT BE NECCESSARY IF PLYWOOD IS USED ON INSIDE WALL FORMS AND ANY OPENINGS ARE FILLED AND OVERLAP RIDGES ARE GROUND SMOOTH.
10. PROVIDE EXTERIOR WATERPROOFING AT ALL SURFACES BELOW GRADE. USE 2 COATS SEAL–MASTIC BY W.R. MEADOWS, OR EQUAL. APPLY PER MFG RECOMMENDATIONS.
11. SET MANHOLE FRAME 1/2" ABOVE GRADE AND SLOPE ADJACENT GRADE TO TOP OF FRAME.
12. MANHOLE COVER AND FRAME TO BE DEETER NO. 1132, NEENAH NO. R–6461, OR EQUAL, RATED FOR H20 WHEEL LOADS. PROVIDE OPEN PICKHOLES, SECURITY BOLTS (W/ WRENCHES TO OWNER) & SELF–SEALING COVER. LABEL "DANGER HIGH VOLTAGE – KEEP OUT" WITH 1/2" HIGH LETTERS.
13. GRATING FOR SUMP PIT SHALL BE DEETER #3009 OR EQUAL. PROVIDE WITH MATCHING FRAME TO BE SET IN CONCRETE.
14. SUPPORT REINFORCING W/ ACCESSORIES (UPTURNED & GALVANIZED LEGS FOR EXPOSED SURFACES) MAX SPACING 48" CENTERS.
15. WATERBAR SHALL BE EXTRUDED PVC MATERIAL, MINIMUM 3/16" THICK x 4" WIDE.
16. PULLING IRON(S) SHALL BE LOCATED OPPOSITE CONDUIT ENTRANCES. COORDINATE W/ELECTRICAL CONTRACTOR. SEE DETAIL THIS SHEET.
17. CABLE RACKS– 48" OVERALL LENGTH CONSTRUCTED OF 3/16" ROLLED STEEL CHANNEL W/PVC COATING. ADJUSTABLE LOCATION OF PVC COATED RACK HOOKS IS POSSIBLE THRU T–SLOTS SPACED @ 1 1/2" INTERVALS. PROVIDE CABLE SUPPORT INSULATORS MADE OF HIGH GRADE ELECTRICAL PORCELAIN. PRODUCTS SHALL BE BY INWESCO OR EQUAL. FIELD VERIFY QUANTITY AND LOCATION IN FIELD.

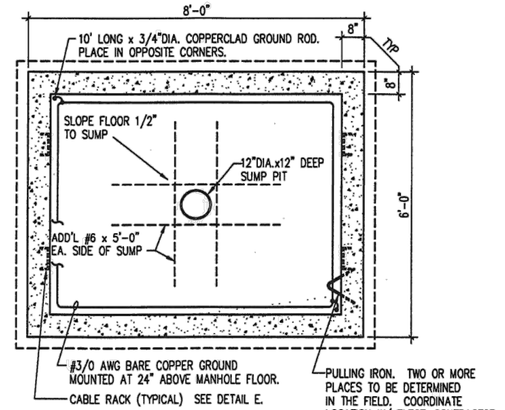

A FLOOR PLAN

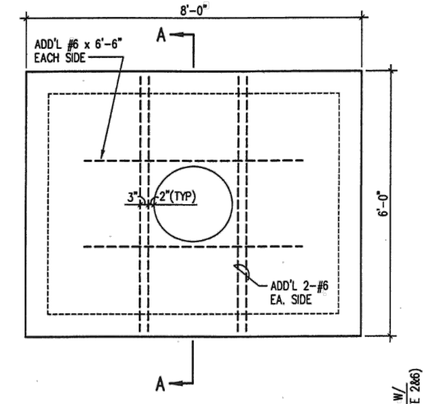

B ROOF PLAN

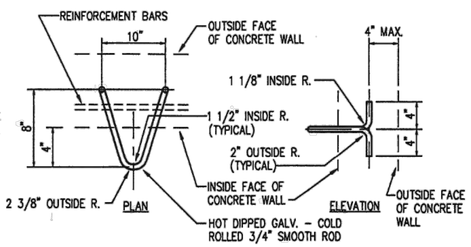

NOTE: CONTRACTOR OPTION TO INSTALL PREFORMED PULLING IRONS.

D DETAIL – PULLING IRON

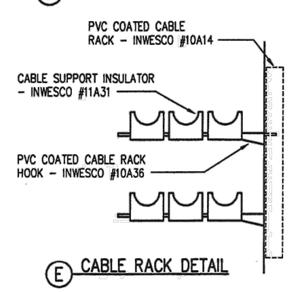

E CABLE RACK DETAIL

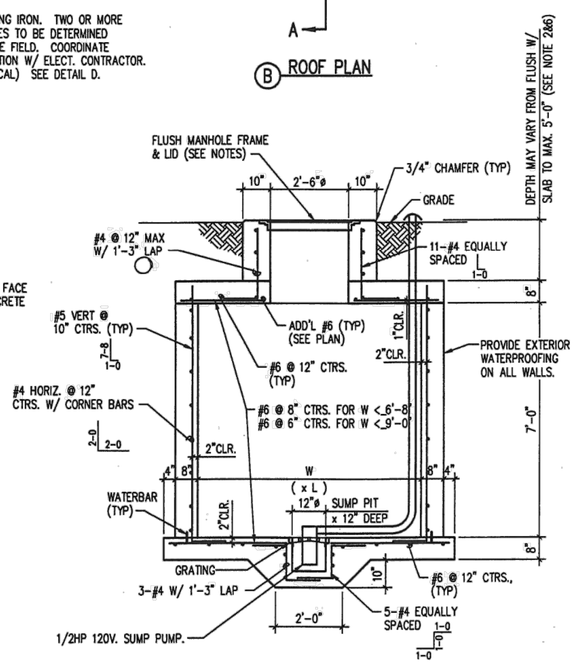

C SECTION A–A

3 MANHOLE DETAIL
NO SCALE

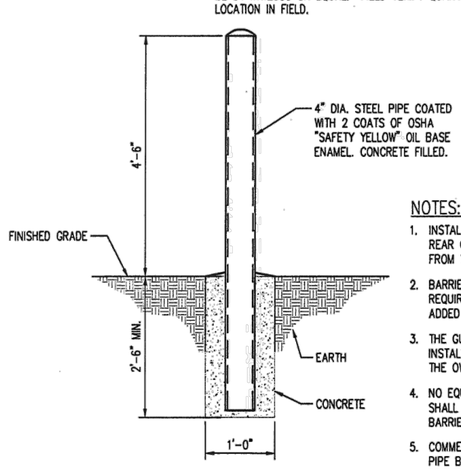

4 PIPE BOLLARD DETAIL
NO SCALE

NOTES:

1. INSTALL GUARD POSTS ON SIDES, FRONT, & REAR OF EQUIPMENT SUBJECT TO DAMAGE FROM VEHICULAR TRAFFIC.
2. BARRIER AS SHOWN IS A MINIMUM REQUIREMENT. VENTILATED FENCE MAY BE ADDED TO SCREEN EQUIPMENT.
3. THE GUARD POSTS & VENTILATED FENCE ARE INSTALLED BY THE G.C. & MAINTAINED BY THE OWNER.
4. NO EQUIPMENT (I.E. METERING EQUIPMENT) SHALL BE ATTACHED TO PROTECTIVE BARRIERS.
5. COMMERICALLY AVAILABLE SCREW–IN TYPE PIPE BARRIERS MAY BE SUBSTITUTED PROVIDING THAT THEY ARE APPROVED BY THE UTILITY COMPANY.

CITY OF WICHITA
NORTHWEST SEWER TREATMENT PLANT NO. 3
Professional Engineering Consultants, P.A.
BROWN AND CALDWELL

No.	Revision	By	Date

NORTHWEST SEWER IMPROVEMENTS PROGRAM MANAGEMENT
NORTHWEST SEWAGE TREATMENT PLANT NO. 3 – PHASE 2
ELECTRICAL DETAILS

303 S. TOPEKA • WICHITA, KANSAS 67202
316-262-2691 • FAX 316-262-3003

Designed by	DEH	Job No. 99452-005	Sht E1.10 of 44
Drawn by	WAN	Date 6/08/01	

PEC
PROFESSIONAL ENGINEERING CONSULTANTS
303 SOUTH TOPEKA
WICHITA, KS 67202
316-262-2691 www.pec1.com

CITY OF WICHITA

SANITARY SEWER RELOCATION
TO SERVE
WASTE WATER TREATMENT PLANT 3

GARY JANZEN, P.E. – CITY ENGINEER
CITY OF WICHITA PROJECT NO. 2020-465-A04792
OCA NO. 5002 ORG CODE 53200020

Issue:

JOB NO.	35-197043-015-042
DATE	APRIL 2020
PM	RWG
DESIGNED BY	TBK
DRAWN BY	CSL
CHECKED BY	RWG

POLE BASE DETAIL

CU204

SAVED 4/23/2020 10:34:27 AM BY CSL
PLOTTED 5/6/2020 11:24:16 AM BY KURTIS DEKAT
U:\WICHITA-CIVIL\2019\197043\015\MUNI\DRAWINGS\197043-015-CU204.DWG