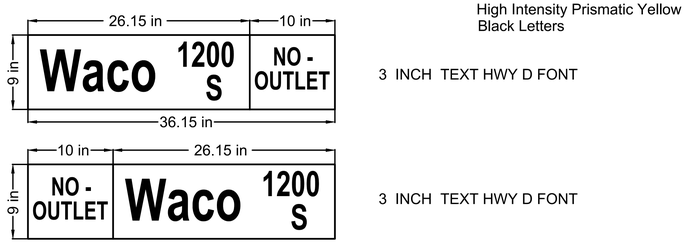

High Intensity Prismatic Yellow
Black Letters

3 INCH TEXT HWY D FONT

3 INCH TEXT HWY D FONT

4.5 inch lower case text HWY D font
6 INCH UPPER CASE TEXT HWY D FONT

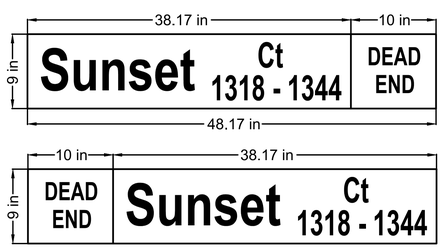

High Intensity Prismatic Yellow
Black Letters

3 INCH TEXT HWY D FONT

3 INCH TEXT HWY D FONT

4.5 inch lower case text HWY D font
6 INCH UPPER CASE TEXT HWY D FONT

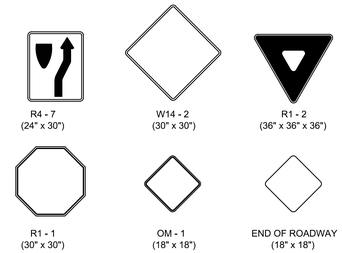

* IN NO CASE SHALL THE SPECIFICATIONS BE LESS THAN REQUIRED BY THE CURRENT MUTCD.

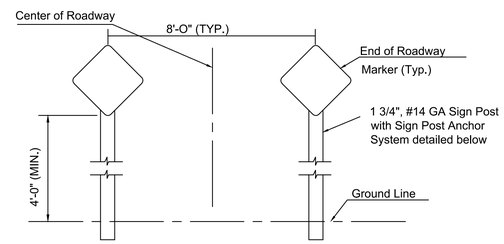

TYPICAL END OF ROADWAY SIGN MOUNTING INSTALLATION

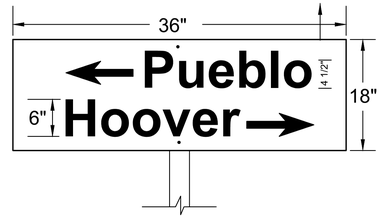

FLAT PLATE STREET NAME SIGN

PERFORATED TUBE SIGN POST INSTALLATION

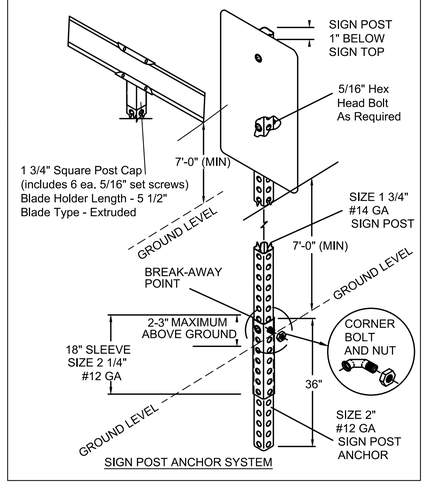

SIGN POST ANCHOR SYSTEM

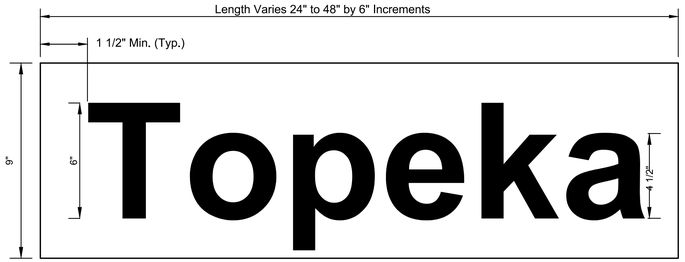

DETAIL A
9" STANDARD

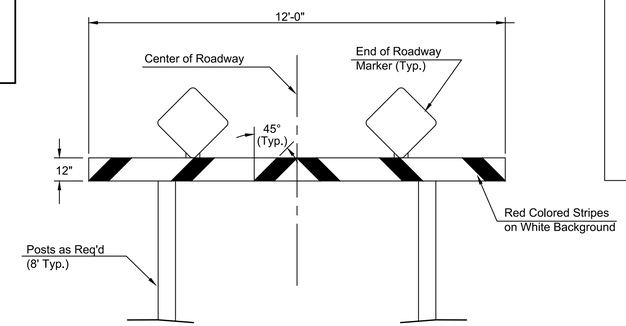

TYPE I BARRICADE DETAIL W/ E.O.R. MARKERS

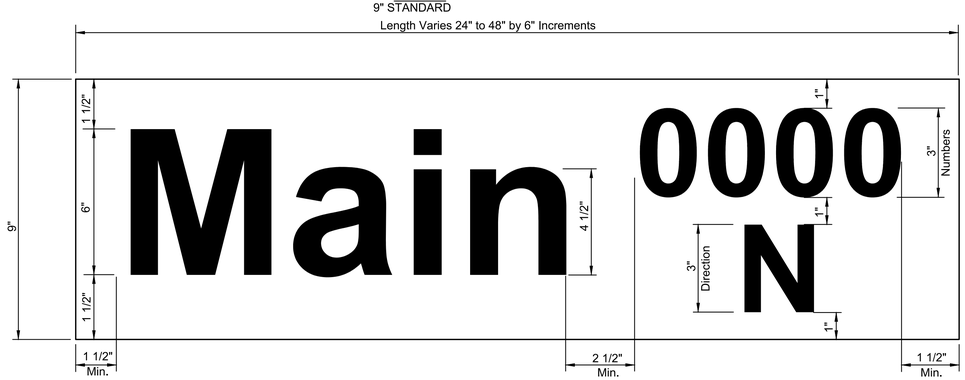

DETAIL B
9" METRO

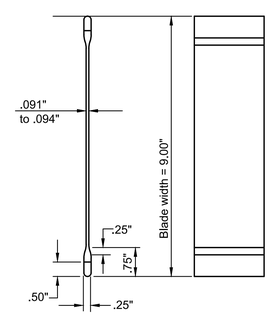

STREET NAME SIGN
BLADE DETAILS

STREET NAME	NO. BLADES REQ'D	
	9" STD.	9" METRO
Ritchfield	1	
Ritchfield Cir.	1	

SIGN ASSEMBLY TABLE

STATION	OFFSET	SIGN	QUANTITY*
Bedford			
10+19	31' RT.	SNS	1