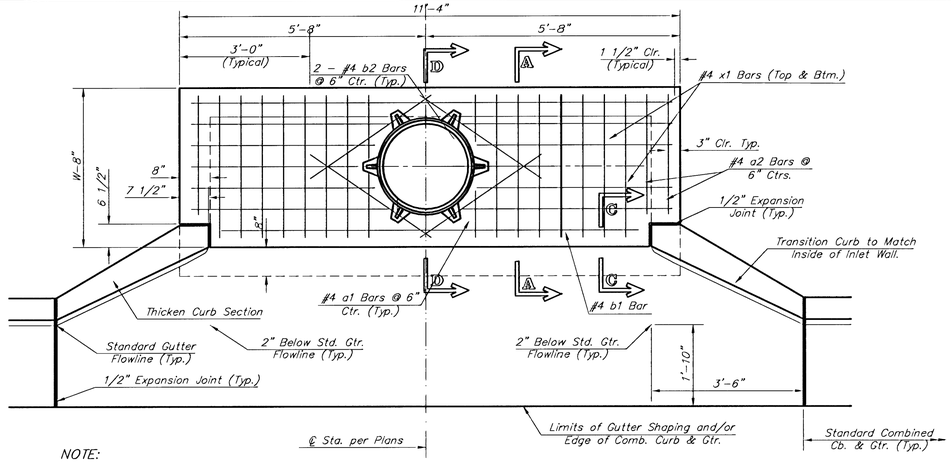

NOTE:
Expansion Joint Only in Curb Area with Concrete Pavement.

PLAN

*Left Side Shown Without Slab Reinforcing, Right Side Shown With Slab Reinforcing

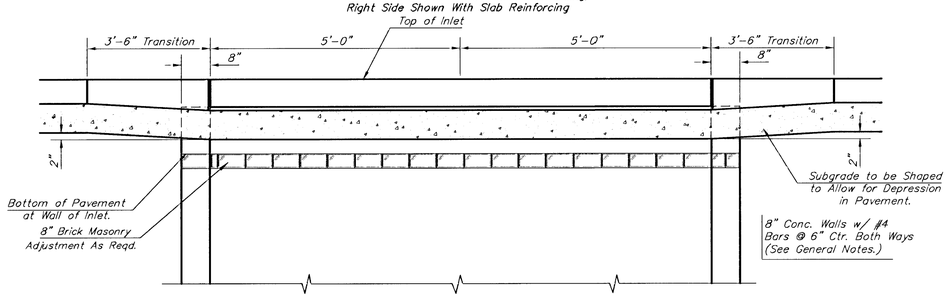

ELEVATION

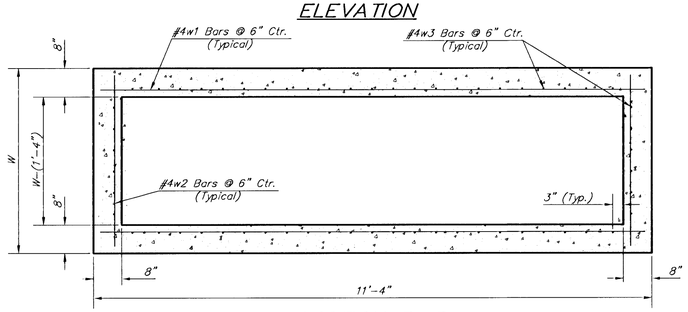

SECTION B-B

NOTES:

** Slope of inlet tops to match sidewalk of parking slopes within limits indicated

STANDARD CURB INLET PRECAST TOPS			
W	PRE-CAST TOP SIZE	PIPE SIZE	CU. YD. CONC.
4'-4"	3'-8" x 11'-4" x 7 1/2"	21" & SMALLER	0.83±
5'-4"	4'-8" x 11'-4" x 7 1/2"	24" & 30"	1.09±
6'-4"	5'-8" x 11'-4" x 7 1/2"	36" & 42"	1.35±
7'-4"	6'-8" x 11'-4" x 7 1/2"	48" & 54"	1.61±
8'-4"	7'-8" x 11'-4" x 7 1/2"	60" & 66"	1.87±

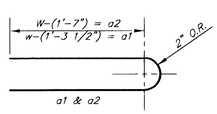

BENDING DIAGRAM

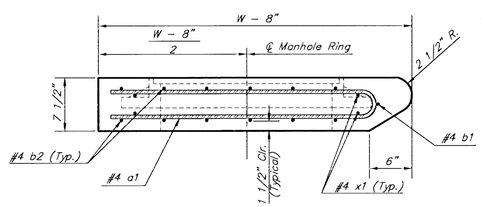

SECTION A-A

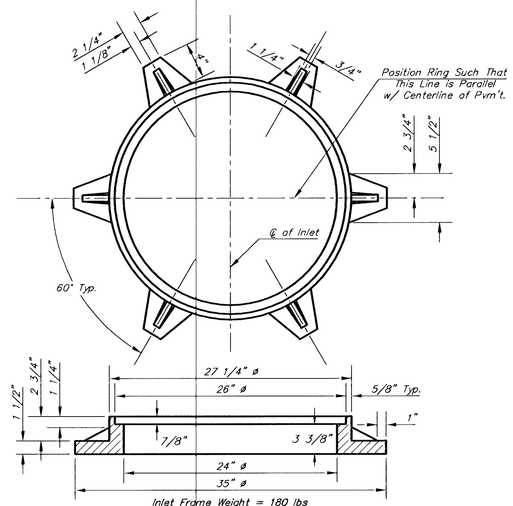

Inlet Frame Weight = 180 lbs

MANHOLE RING AND COVER

*See City of Wichita Standard Manhole Ring and Cover Detail Sheet for Cover Details to Be Used With Inlet Frame.

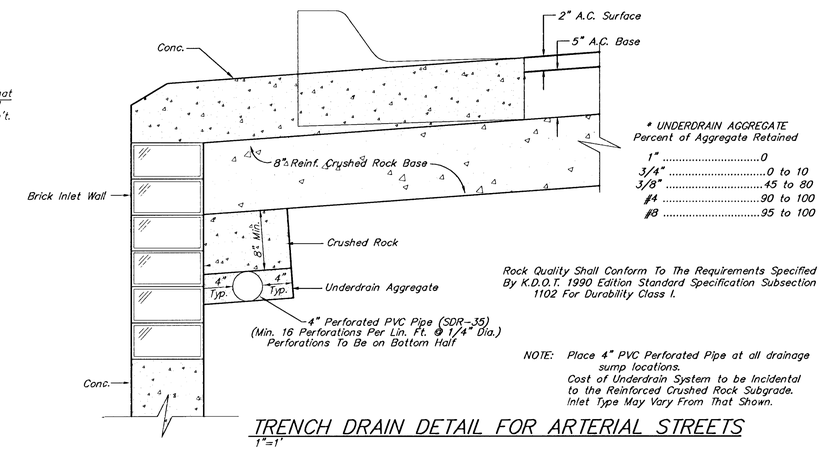

* UNDERDRAIN AGGREGATE
Percent of Aggregate Retained

1"	0
3/4"	0 to 10
3/8"	45 to 80
#4	90 to 100
#8	95 to 100

Rock Quality Shall Conform To The Requirements Specified By K.D.O.T. 1990 Edition Standard Specification Subsection 1102 For Durability Class I.

NOTE: Place 4" PVC Perforated Pipe at all drainage sump locations. Cost of Underdrain System to be Incidental to the Reinforced Crushed Rock Subgrade. Inlet Type May Vary From That Shown.

TRENCH DRAIN DETAIL FOR ARTERIAL STREETS

1"=1'

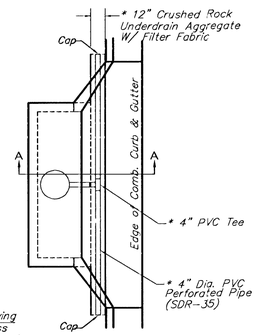

PLAN

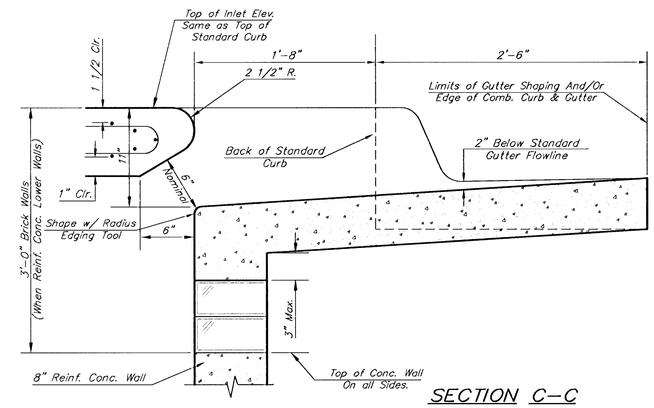

SECTION C-C

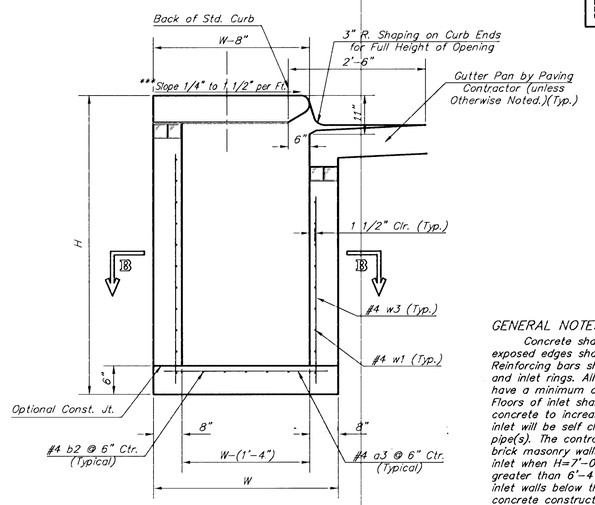

SECTION D-D

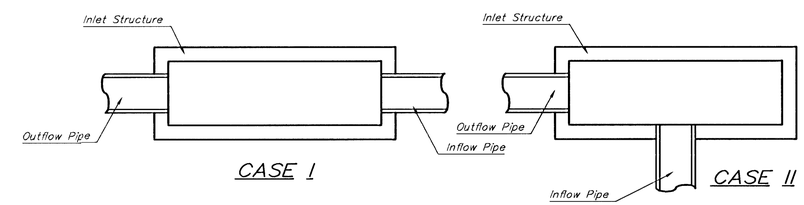

CASE I

CASE II

GENERAL NOTES:

Concrete shall be C.O.W. standard paving mix. All exposed edges shall be finished with an edging tool. Reinforcing bars shall be field bent or cut to clear pipes and inlet rings. All bars are #4 bars @ 6" spacing and shall have a minimum clearance of 1 1/2" unless otherwise noted. Floors of inlet shall be shaped with 8 sack sand mix concrete to increase hydraulic efficiency such that the inlet will be self cleaning between all inlet and/or outlet pipe(s). The contractor will be required to to construct 8" brick masonry walls between the inlet base and top on this inlet when H=7'-0" or less and W=6'-4" or less. When W is greater than 6'-4" and H is less than 7'-0", the outside inlet walls below the brick stack shall be reinforced concrete construction.

Concrete tops to be installed on thin mortar cushion to insure full support along brick walls. Concrete tops may be cast in place or precast.

The ends of all pipes installed in inlets shall be cut off flush with the inside face of the inlet wall.

This detail is identical to the standard detail drawing except that the gutter transition length is increased from 2'-0" to 3'-6".

PRECAST SLAB AND FLOOR REINFORCING											
		W = 4'-4"		W = 5'-4"		W = 6'-4"		W = 7'-4"		W = 8'-4"	
MARK	SIZE	NO.	LENGTH	NO.	LENGTH	NO.	LENGTH	NO.	LENGTH	NO.	LENGTH
a1	#4	13	6'-7"	13	8'-7"	13	10'-7"	13	12'-7"	13	14'-7"
* a2	#4	4	6'-0"	4	8'-0"	4	10'-0"	4	12'-0"	4	14'-0"
a3	#4	23	4'-1"	23	5'-1"	23	6'-1"	23	7'-1	23	8'-1"
b1	#4	1	9'-9"	1	9'-9"	1	9'-9"	1	9'-9"	1	9'-9"
* b2	#4	23	11'-1"	29	11'-1"	35	11'-1"	41	11'-1"	47	11'-1"
x1	#4	16	3'-10"	16	4'-2"	16	4'-6"	16	4'-10"	16	5'-2"
WALL REINFORCING											
		W = 4'-4"		W = 5'-4"		W = 6'-4"		W = 7'-4"		W = 8'-4"	
MARK	SIZE	NO.	LENGTH	NO.	LENGTH	NO.	LENGTH	NO.	LENGTH	NO.	LENGTH
w1	#4	①	11'-1"	①	11'-1"	①	11'-1"	①	11'-1"	①	11'-1"
w2	#4	①	4'-1"	①	5'-1"	①	6'-1"	①	7'-1"	①	8'-1"
w3	#4	52	②	56	②	60	②	64	②	68	②

* Field Bend or Cut Reinforcing as Required for Clearance.

① 4 (Hl - 12") (Hl - 21") Rounded down to nearest 0.5'

② Hl - 3"

Revised - July 23, 1998
Revised - Feb. 16, 1989

PROJECT NUMBER			SHEET NAME	ENGINEERING DIRECTORY	
City Of Wichita			Typ1a-d	F:\\Central\typ1a-d	
DESIGN	DRAWN	APPROVED	DATE	SCALE	BAUGHMAN NO
JFB/KK	STAFF	JFB	FEB 2002	NONE	99-09-E463

CITY OF WICHITA, KANSAS
STANDARD TYPE 1a DOUBLE CURB INLET DETAILS
INLET OPENING = 8' x 10'-0"

BAUGHMAN COMPANY, P.A.
ENGINEERING, SURVEYING, & PLANNING
316-262-7271 * 315 ELLIS * WICHITA, KANSAS 67211

SHEET 20 OF 42