FHWA REGION NO.	STATE	PROJECT NO.	YEAR	SHEET NO.	TOTAL SHEETS
7	KANSAS			23	36

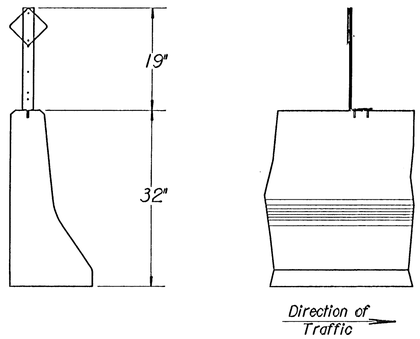

TYPICAL MOUNTING DETAIL

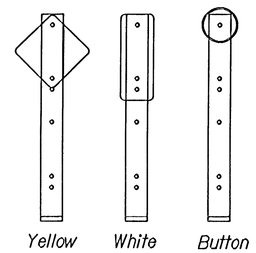

DELINEATOR POSITION DETAILS

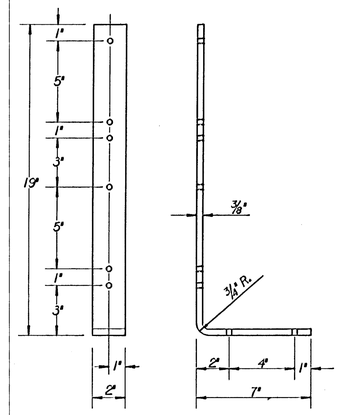

DELINEATOR BRACKET DETAILS

DESIGN DETAILS FOR DELINEATION ON 32" CONCRETE SAFETY BARRIER SECTION

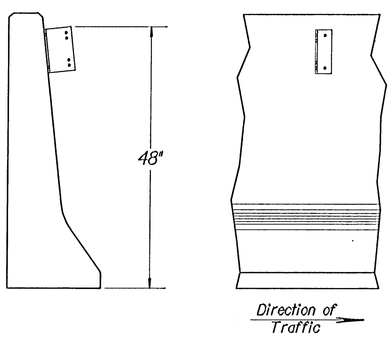

TYPICAL MOUNTING DETAIL

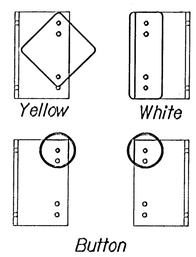

DELINEATOR POSITION DETAILS

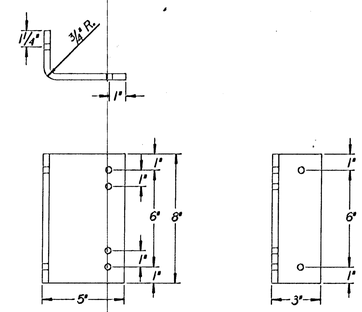

DELINEATOR BRACKET DETAILS

DESIGN DETAILS FOR DELINEATION ON 51" CONCRETE SAFETY BARRIER SECTION

NOTE: The aluminum sign blanks are to be ASTM B-209(H), Alloy 6061-16, or 5154-H38, or 5052-H38.
The aluminum sign blank shall be 0.040" thick.
Both faces and all cut edges of sign to be degreased and etched.
All holes to be 5/16" in diameter.

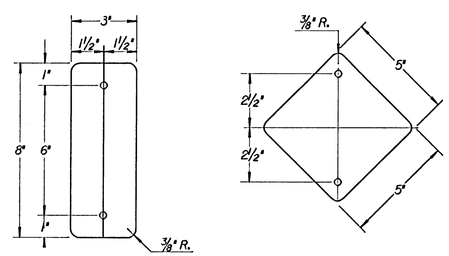

FLAT SHEET SIGN BLANK DETAILS:

GENERAL NOTES

The delineators shall be spaced on 200' centers, except through curves greater than 3° curvature and along ramps and ramp tapers where the spacing shall be on 100' centers. Delineators should be installed back to back when used on 32" median barrier for two-way roadways. The delineator color shall be yellow when used on the left side or white when used on the right side of the roadway.

The flat sheet sign blank shall be made of the aluminum alloy and thickness shown.

The 3" x 8" delineator sign face shall be covered with high performance white reflective sheeting. The 5" x 5" delineator sign face shall be covered with high performance yellow reflecting sheeting.

The type of adhesive for reflective sheeting shall be heat activated or pressure sensitive.

The 3-1/4" diameter white or yellow button delineator shall comply with the KDOT Standard Specifications.

The delineator bracket shall be fabricated from aluminum in the thickness and sizes shown. The material for the brackets shall comply with the Standard Specifications. All holes for mounting the delineator to the bracket shall be 3/8" diameter. The holes for mounting the bracket to the barrier shall be 11/16" diameter. All burrs and sharp edges shall be smoothed off. The brackets shall not be fabricated by the use of welding.

All items of the fastening accessories shall be Zinc or Cadmium plated.

The machine screws, nuts, and washers used to fasten the delineator to the bracket shall comply with the Standard Specifications.

Only one type of delineator shall be used on any project. The type of delineator (flat sheet or button) used on the project shall be as directed by the Engineer.

All work and materials required for the installation of the delineators shall be Subsidiary to the bid item "Concrete Safety Barrier".

When delineators are installed on median or roadside barriers approaching a bridge, they shall be installed on the bridge rail in accordance with the spacing and details on this sheet.

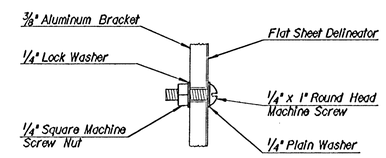

FLAT SHEET DELINEATOR MOUNTING

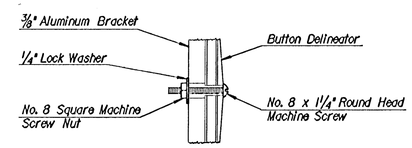

BUTTON DELINEATOR MOUNTING

DETAILS FOR ATTACHING DELINEATORS TO BRACKETS

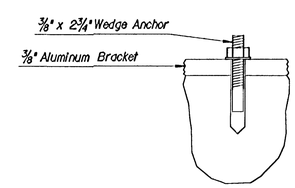

DETAILS FOR ATTACHING BRACKETS TO SAFETY BARRIER

NO.	DATE	REVISIONS	BY	APP'D
1	2-18-93	Revised delineation note	B.N.B.	R.J.S.

KANSAS DEPARTMENT OF TRANSPORTATION

DESIGN DETAILS FOR DELINEATION ON CONCRETE SAFETY BARRIER

RD624 23/36

FHWA APPROVAL	3-2-93	APP'D James O. Brewer	
DESIGNED	DETAILED	QUANTITIES	TRACED B.B. M.R
DESIGN CK.	DETAIL CK.	QUAN.CK.	TRACE CK. Seitz

Drawn By : $$USERNAME$$ Plotted : $$$$SYTIME$$$$
File : $$$$$