| FHWA REGION NO. | STATE | PROJECT NO. | YEAR | SHEET NO. | TOTAL SHEETS |
|---|---|---|---|---|---|
| 7 | KANSAS | | | 24 | 36 |

Ⓐ 8 x 64 Carriage bolt, flat washer and nut
Ⓑ 8 x 150 Carriage bolt, flat washer and nut
Ⓒ 8 x 200 Carriage bolt, flat washer and nut
Ⓓ 8 x 38 Carriage bolt, flat washer and nut

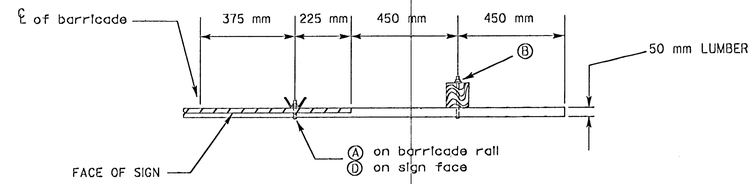


PARTIAL PLAN VIEW
NOT TO SCALE

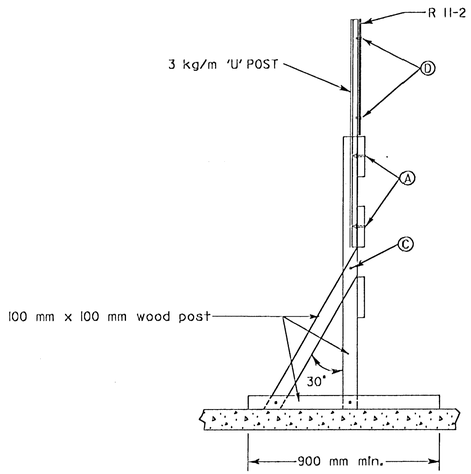


SIDE VIEW
SECTION A-A

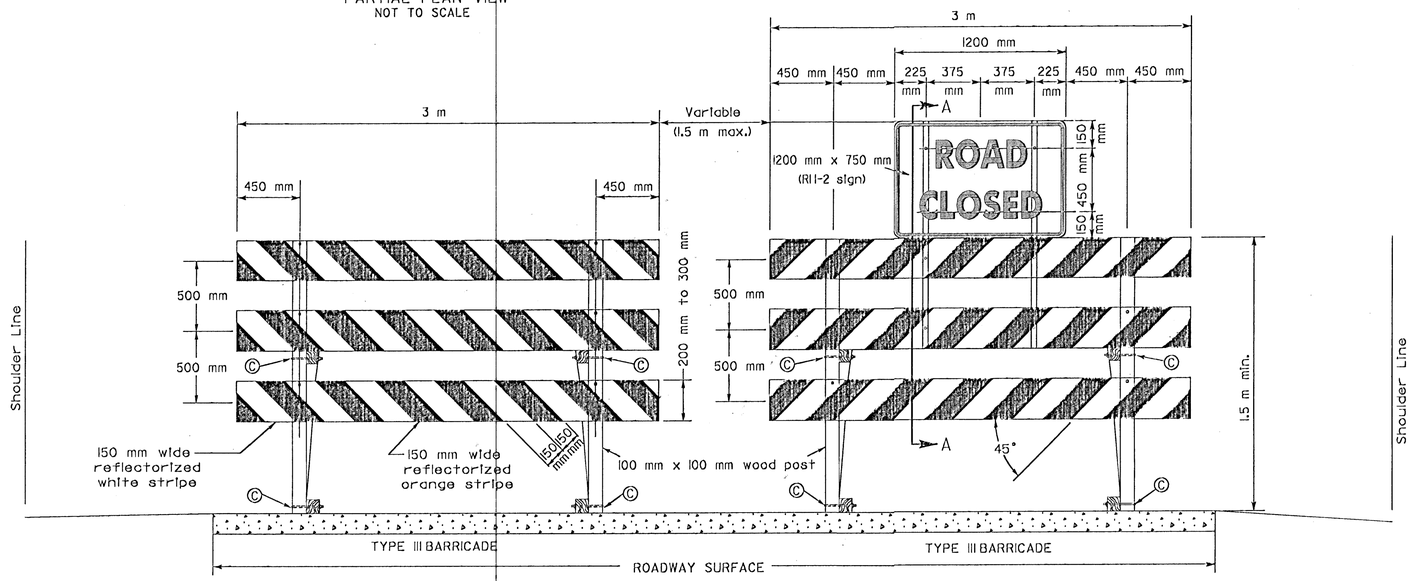


FRONT VIEW

GENERAL NOTE

BORDER AND LEGEND ON THE ROAD CLOSED SIGN SHALL BE AS SPECIFIED IN THE MANUAL ON UNIFORM TRAFFIC CONTROL DEVICES, CURRENT EDITION. BACKGROUND SHALL BE COVERED WITH TYPE II HIGH PERFORMANCE RETROREFLECTIVE SHEETING.

ALUMINUM SIGN BLANK IS TO BE ASTM B209(H) ALLOY 6061-T6, 5154-H38, OR 5052-H38. BOTH FACES AND ALL CUT EDGES OF SIGN TO BE DEGREASED AND ETCHED. SIGNS SHALL BE MANUFACTURED FROM 2.5 mm THICK ALUMINUM.

ALL HOLES ON SIGN BLANK ARE 10 mm SQUARE, UNLESS OTHERWISE NOTED.

THE R11-2 SIGN IS TO BE INCLUDED IN THE BID ITEM DIRECT SCREEN PROCESS SIGNS (HIGH PERFORMANCE).

ALL ITEMS OF FASTENING ACCESSORIES ARE REQUIRED TO BE ZINC OR CADMIUM PLATED. THE CARRIAGE BOLTS, NUTS AND WASHERS SHALL COMPLY WITH SUBSECTION 1614 OF THE STANDARD SPECIFICATIONS FOR STATE ROAD AND BRIDGE CONSTRUCTION (1990 EDITION).

ALL 'U' POST SECTIONS SHALL BE GALVANIZED. THE POSTS SHALL COMPLY WITH THE WEIGHT TOLERANCE AND COATING REQUIREMENTS OF SUBSECTION 1620 OF THE STANDARD SPECIFICATIONS FOR STATE ROAD AND BRIDGE CONSTRUCTION (1990 EDITION).

WOOD POSTS SHALL BE GIVEN A PRESERVATIVE TREATMENT AS PROVIDED IN THE K.D.O.T. STANDARD SPECIFICATIONS.

TYPE III BARRICADES PLACED ACROSS A ROADWAY SHALL BE SUITABLY DISTRIBUTED ACROSS THE ROAD TO EFFECTIVELY CLOSE THE ROADWAY.

BARRICADES ARE TO BE SET AT EACH ROAD TO BE CLOSED AS SPECIFIED ON THE PLANS.

FOR WOODEN BARRICADES, NOMINAL LUMBER DIMENSIONS WILL BE SATISFACTORY.

THE ENTIRE AREA OF BARRICADE RAILS SHALL BE FULLY REFLECTORIZED WITH TYPE II HIGH PERFORMANCE RETROREFLECTIVE SHEETING.

BARRICADES INTENDED FOR USE ON ROADWAYS WITH SPEED LIMITS OF 45 MPH OR MORE SHALL HAVE A MINIMUM OF 0.175 $m^2$ OF RETROREFLECTIVE AREA FACING TRAFFIC.

THE STRIPES SHALL SLOPE DOWNWARD AND TOWARD THE CENTER OF THE ROADWAY AT ROAD CLOSURES.

THE BID ITEM TYPE III BARRICADE (TEMPORARY) IS FOR ONE BARRICADE.

SUMMARY OF TYPE III BARRICADES (TEMPORARY)

| QTY. BARRICADES | QTY. R11-2 SIGNS | STATION | LOCATION-DESCRIPTION |
|---|---|---|---|
| | | | |

| NO. | DATE | REVISION | BY | APP'D |
|---|---|---|---|---|
| 3 | | | | |
| 2 | | | | |
| 1 | | | | |

**KANSAS DEPARTMENT OF TRANSPORTATION**

TYPE III BARRICADE (TEMPORARY)
WITH R11-2 SIGN

24/36

TE620SI 12-30-94

FHWA APPROVAL 1-10-95 | APP'D NELDA A. BUCKLEY
DESIGNED | DETAILED | QUANTITIES | TRACED
DESIGN CK. | DETAIL CK. | QUAN. CK. | TRACE CK.

Plotted By : ooUSERNAMEoo Thacher Bldg. 4th Floor
Plot File : oooooooooooooooDGNSPECooooooooooooo
Plot Date : oooooSYTIMEoooooo