FHWA REGION NO.	STATE	PROJECT NO.	YEAR	SHEET NO.	TOTAL SHEETS
7	KANSAS		19	25	47

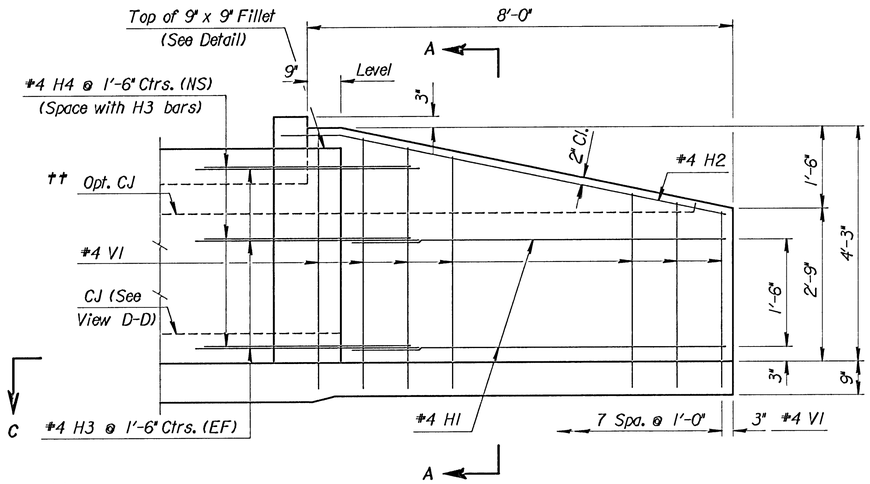

†† See RCB Details for location of construction joint.

ELEVATION OF WINGWALL

(Backface Shown)

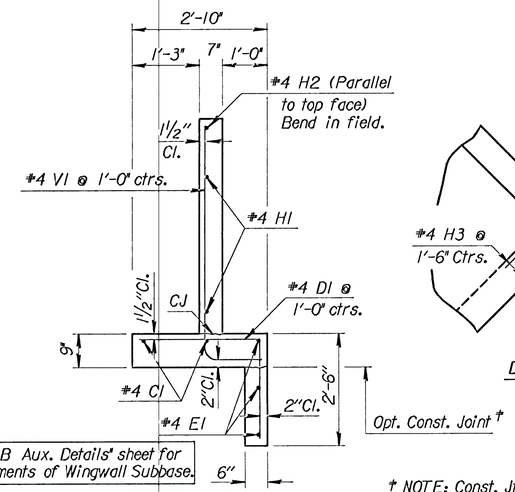

See "RCB Aux. Details" sheet for requirements of Wingwall Subbase.

SECTION A-A

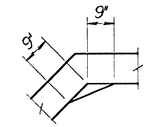

Fillet Detail

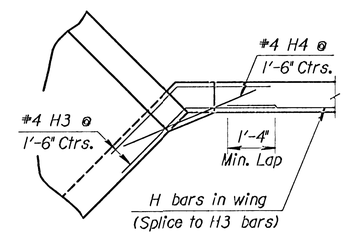

DETAIL OF 9" x 9" FILLET

(Plan View)

† NOTE: Const. Jt. may be used at Contractor's option when approved by the Engineer. DI bars or mesh may be spliced thus: Minimum overlap shall be 1'-3". No increase in quantities or cost shall be allowed when Contractor elects this option.

GENERAL NOTES

UNIT STRESSES: Class AAA Concrete; f'c = 4,000 p.s.i.
Reinforcing Steel; fy = 60,000 p.s.i.

CONCRETE: Class AAA Concrete shall be used throughout. Bevel all exposed edges with a ¾ inch triangular moulding.

REINFORCING: All reinforcing shall conform to ASTM A615, Grade 60. Welded Wire Fabric shall conform to ASTM A185. All dimensions relative to reinforcing steel shall be to center-line of bar unless otherwise noted.

QUANTITIES: Wingwall Quantities include all quantities outside the neat lines of the box, excluding the hubguard.

APRON: A 5" concrete slab shall be constructed between the downstream wings in locations subject to scour only when specified on the plans or by the Engineer. Wire Reinforcing mesh shall be electrically welded and shall be composed of 6 x 5-W1.4 x W1.4 welded wire fabric and shall be classified as pounds of reinforcing.

FOUNDATION AND BACKFILL MATERIAL: Soils judged as high plasticity clays, fat clays, expansive clays, or organic clays are unsuitable for foundation and/or backfill material for wingwalls and will not be used. Where these conditions exist, Foundation Stabiliation and/or Granular Backfill (Wingwalls) shall be used as determined by the Engineer. See "RCB Auxiliary Details" sheet for additional details.

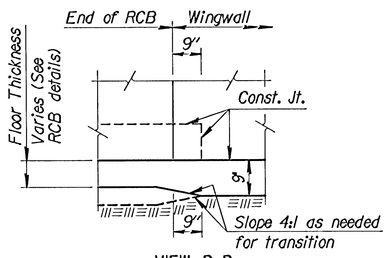

VIEW D-D

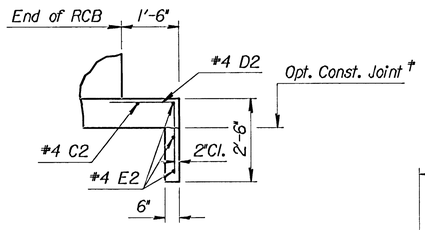

SECTION E-E

NOTE:
EF = Each Face
NS = Near Side
FS = Far Side
CJ = Const. Joint

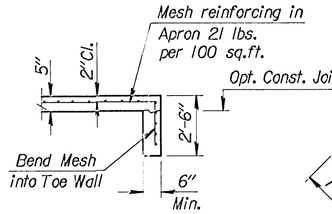

SECTION B-B

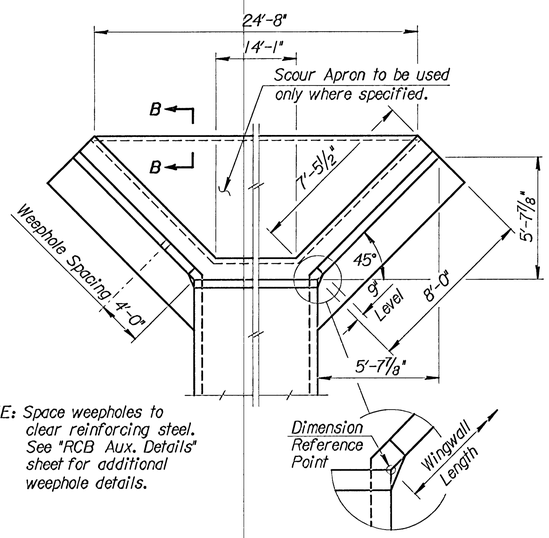

NOTE: Space weepholes to clear reinforcing steel. See "RCB Aux. Details" sheet for additional weephole details.

WING DIMENSIONS FOR NORMAL BOX

(3½:1 Embankment Slope)

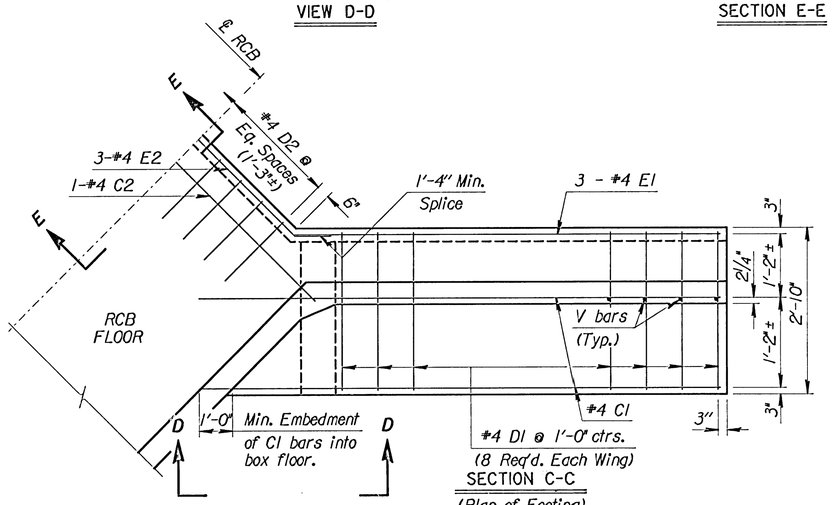

SECTION C-C

(Plan of Footing)

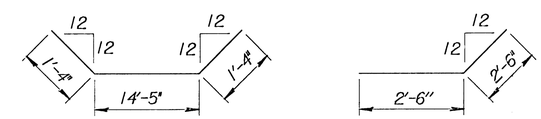

E2 H3

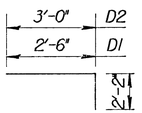

DI, D2

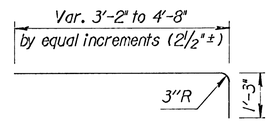

VI

(2 Req'd., each length)

BENDING DIAGRAM

(All dimensions are out to out of bars.)

Quantities listed below are included in the Summary of Quantities shown on the RCB details.

WINGWALL QUANTITIES (One End Only)		
Class AAA Concrete:		
Wingwalls	3.99	CY.
Apron	2.53	CY.
Soil Saver	0.00	CY.
Reinforcing Steel	326.87	Lbs.
Welded Wire Fabric	34.42	Lbs.

NOTE: Reinforcing Bar List is for both wings at one end of box only.

		#4CI	#4DI	#4EI	#4C2	#4D2	#4E2	#4VI	#4HI	#4H2	#4H3	#4H4
0° Skew	No.	4	16*	6	1	11*	3*	16	4	2	12*	6
	Length	9'-10"	4'-8"	7'-3"	15'-3"	5'-2"	17'-1"	*	6'-10"	8'-9"	5'-0"	3'-6"

* See Bending Diagram

NO.	DATE	REVISIONS	BY	APP'D

KANSAS DEPARTMENT OF TRANSPORTATION

Sta.

FLARED WINGWALLS
3 FT. RISE (0°SKEW)

25/47

BR 10.00.03 SEDGWICK CO.

FHWA APPROVAL		6-5-91	APP'D		KENNETH F. HURST
DESIGNED		DETAILED	QUANTITIES		TRACED
DESIGN CK.		DETAIL CK.	QUAN. CK.		TRACE CK.

VERSION: 5.1.0 COMPILED: 02/09/99

ORIG. FROM BRJAD.

PROJ.	CO. CHECK	
DESIGN	DATE	DATE
DETAIL	DATE	DATE
QUANTITIES	DATE	DATE
TRACING	DATE	DATE
RETRACED	DATE	DATE

thorsell
F:\b273.dgn
10-AUG-2001 10:53
View= PLOT10