SERVICE BOX CONSTRUCTION/INSTALLATION DETAILS

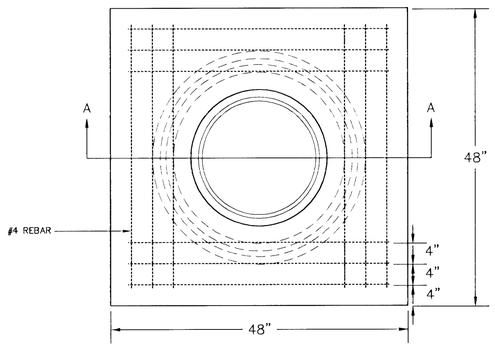

PRE-CAST CONCRETE SERVICE BOX

(36" I.D. X 54" RCP) with 6" CAP

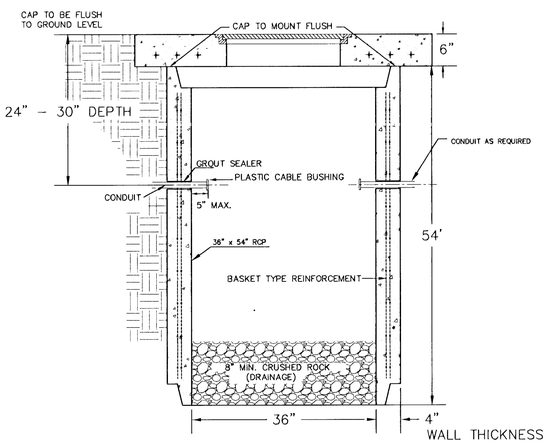

SECTION A-A

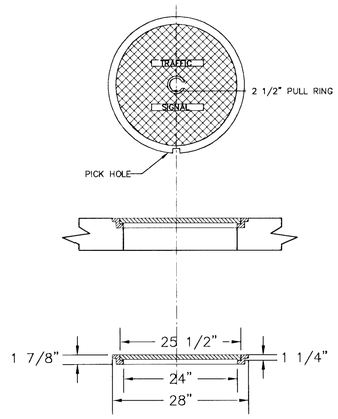

RING & COVER DETAIL

170 CONTROLLER PAD DETAILS

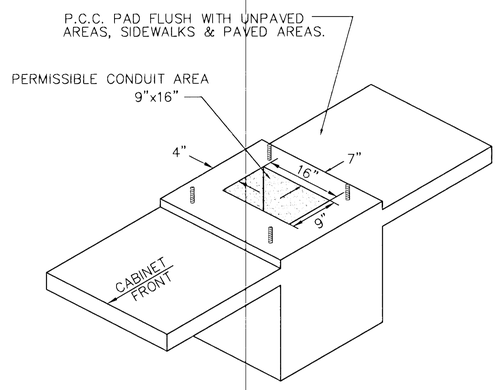

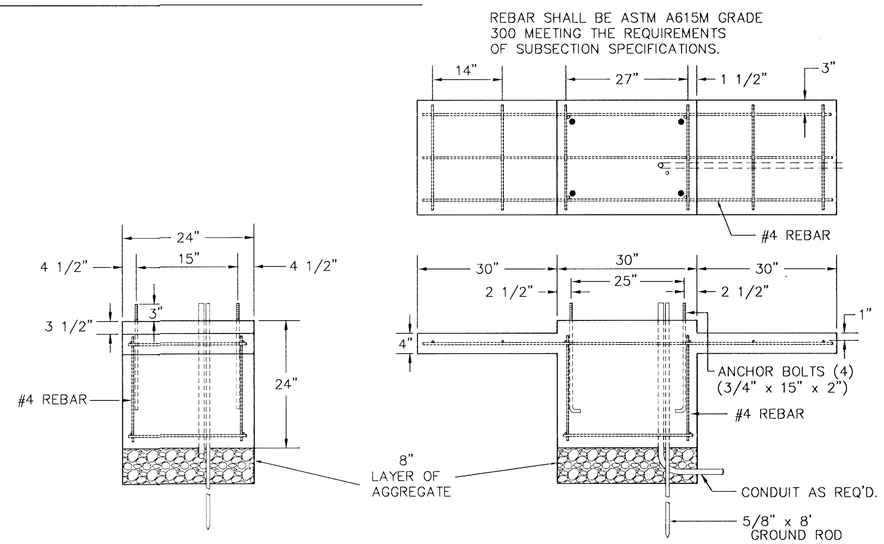

JUNCTION BOX DETAILS

PRE-FAB Junction Box (24" I.D. X 36" R.C.P.)

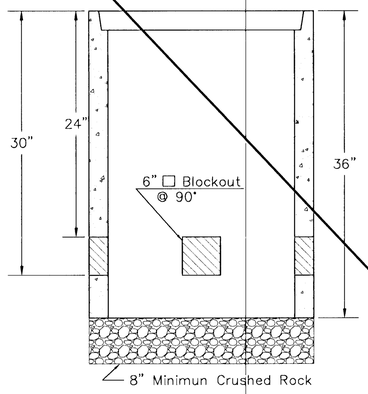

SECTION A-A

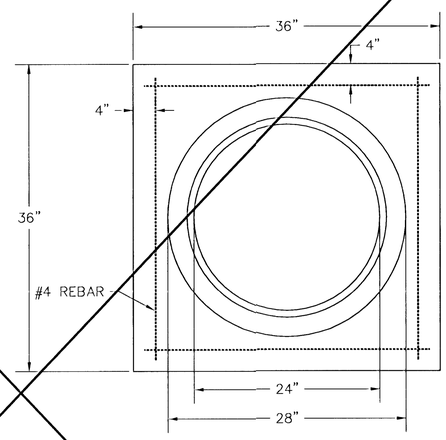

JUNCTION BOX CAP

36" x 36" x 6"
TOP OF CAP TO BE FLUSH WITH GROUND LEVEL.

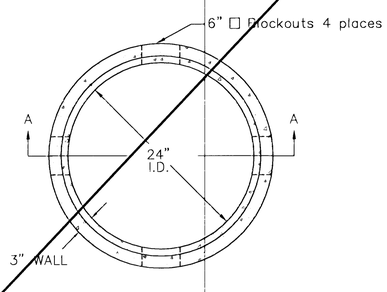

"SEE SERVICE BOX INSTALLATION FOR RING & COVER DETAILS.

NOTES:

SERVICE & JUNCTION BOX:

1. CONDUIT CONNECTION TO BE FLUSH TO WITHIN 5" OF INSIDE FACE OF SIDE WALL, CONDUIT TO DRAIN INTO SERVICE BOX.
2. CONDUIT CONNECTIONS TO SERVICE BOX SHALL BE TERMINATED WITH PLASTIC CABLE BUSHING.
3. CONDUIT SHALL BE SEALED WITH APPROVED SEALER AT INSIDE WALL FACE.
4. ALL SERVICE & JUNCTION BOXES TO HAVE 8" OF CRUSHED ROCK.

TRENCHING:

1. DEPTH TO BE 30" MINIMUM WITH ROCK & STUBBLE FREE BACKFILL TO SERVE AS BEDDING MATERIAL. MAINTAIN MINIMUM CONDUIT DEPTH IN TRENCH.
2. BACKFILL TO BE COMPACTED IN 6" LOOSE LIFTS BY HAND OR MECHANICAL TAMPING TO A 95% STANDARD DENSITY.

CONDUIT:

1. SLOPE CONDUIT TO DRAIN AS DIRECTED BY THE ENGINEER.
2. 3" RIGID STEEL CONDUIT BTWN. SERVICE BOXES.
   1 1/4" " " " BTWN. SERVICE & JUNCTION BOXES.
   3/4" " " " BTWN. JUNCTION BOXES.
   3/4" " " " BTWN. JUNCTION BOX & DETECTOR LOOP SAW CUT

CONDUIT/DETECTOR WIRE INSTALLATION DETAILS

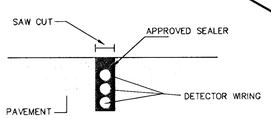

STD. CURB & GUTTER

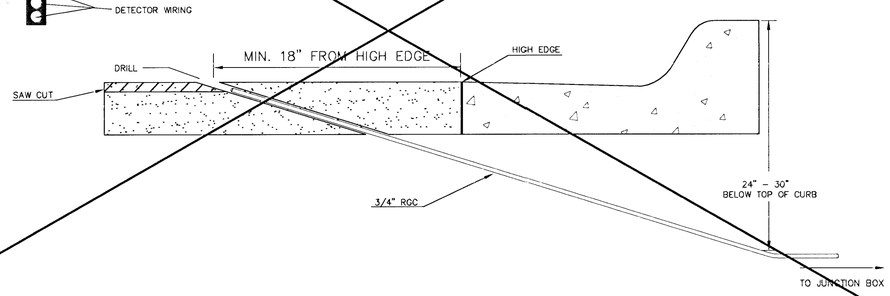

REV. DATE	COMMENTS	INT

PROJECT DESCRIPTION

SERVICE/JUNCTION BOX, CONTROLLER PAD CONSTRUCTION/INSTALLATION DETAILS

PROJECT NUMBER

Hydraulic Avenue - 47th Street South to Macarthur

DRAWN BY: T.M. | APPROVED BY: This scanned (but modified) dxf dwg file has been electronically reproduced from an original drawing dated Sept 1995, courtesy of SG Seal, Jr. | REVISED: SGS,Jr

DATE: Apr. 96 | DATE: JUN1997

CITY OF WICHITA

DEPARTMENT OF PUBLIC WORKS

TRAFFIC ENGINEERING DIVISION

WM. G. McKINLEY P.E. TRAFFIC ENGINEER

SCALE: NO SCALE

SH: 70 OF: 102

DETAIL/TRAFFIC/SERT.DWG