FHWA REGION NO.	STATE	PROJECT NO.	YEAR	SHEET NO.	TOTAL SHEETS
7	KANSAS	87U-1247-01	1992	36	79

*NOTE: Adjust Spacing to Clear U-bolts. U-Bolt Spacing has priority over Reinforcing Spacing.

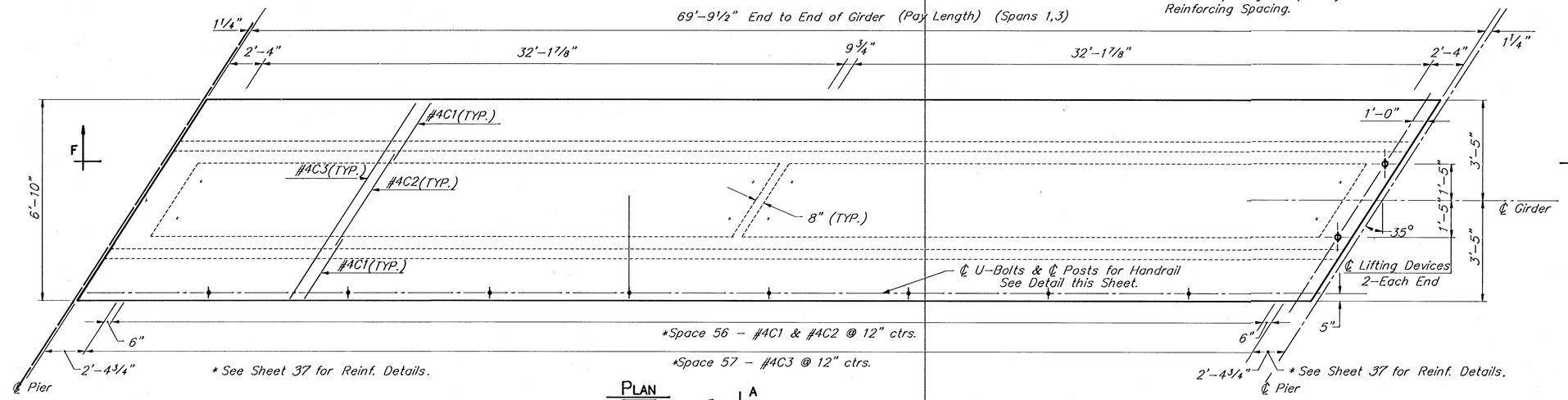

PLAN

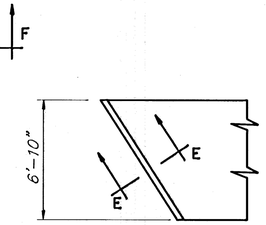

PLAN

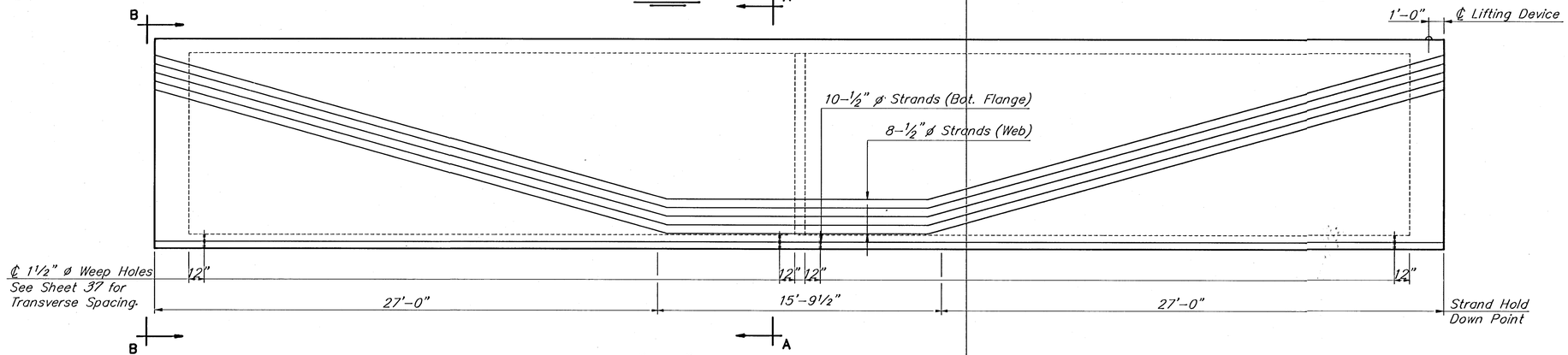

ELEVATION "F-F"

Approx. Wt.=39.2 Tons

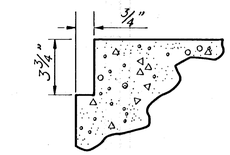

SECTION E-E

EXPANSION NOTCH (TYP. EA. END OF GIRDER)

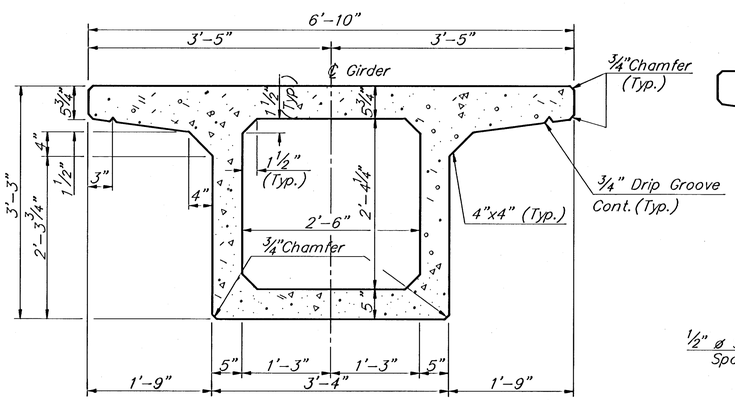

TYPICAL SECTION

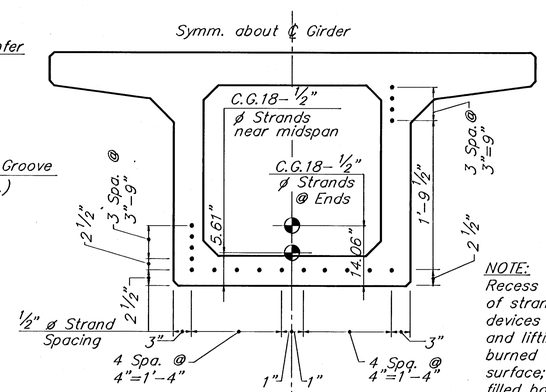

HALF SECTION A-A

NEAR MIDSPAN

HALF SECTION B-B

AT ENDS

NOTE:
Recess the bearing ends of strands and lifting devices so that the strands and lifting devices may be burned off ¼" inside the surface; recesses shall be filled back flush with an approved adhesive grout.

See Sheet 24 for Notes.
See Sheet 37 for Reinforcing Details.
See Sheet 34 for Girder Layout.
See Sheet 42 for U Bolt Detail.

SUMMARY OF QUANTITIES

ITEM	UNIT	QUANTITY
Prestressed Concrete Beam (Box-T)(69'-9½") (2 Req'd.)	Lin. Ft.	139.58
Following Approx. Quantities are for information Only (Total 2 Beams)		
Concrete in the Beams (f'c=5,000 p.s.i.)	C.Y.	39
Prestressing Steel A416-½" ø (Low Lax).	Lin. Ft.	2,550
Reinforcing Steel (Gr. 60) (Epoxy Coated)	Lbs.	4,480
½" ø Galv. U-Bolts w/ nuts, washer	Ea.	32
1'-8"x0'-8"x1" Bearing Pad (Duro. 60)	Ea.	8

Subsidiary to Prestressed Concrete Beams (Box-T)

CITY OF WICHITA

GEORGE WASHINGTON BLVD. BRIDGE OVER GYPSUM CREEK

SIDEWALK GIRDER DETAILS II

CITY OF WICHITA PROJ. NO.: 472-82156

Booker ASSOCIATES INC. OF KANSAS
Wichita Kansas

SCALE — DATE June, 1992 DWG. NO. K9331

SURV. — PLOT CADD — DES. R.G./A.H. — DR. G.B./E.K. — TR. — CKD. R.G. — APP. S.K.B.

\K9331BR\SWKGDET2
1"=4"