FHWA REGION NO.	STATE	PROJECT NO.	YEAR	SHEET NO.	TOTAL SHEETS
7	KANSAS	87U-1247-01	1992	37	79

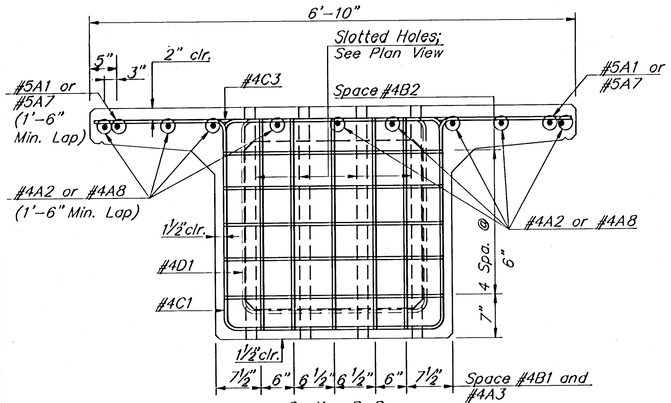

Section B-B

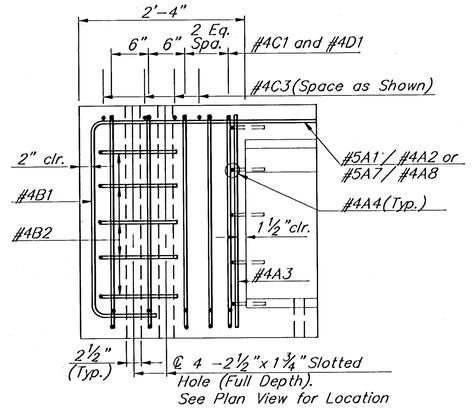

Section 'A-A'

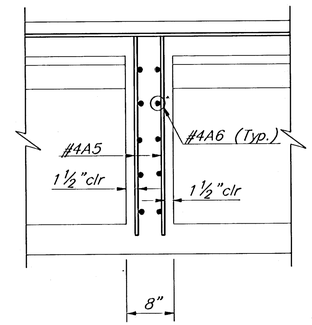

Section 'D-D'

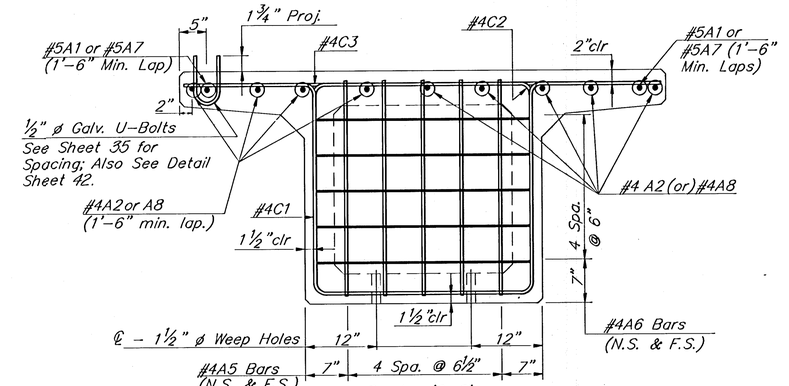

Section 'C-C'

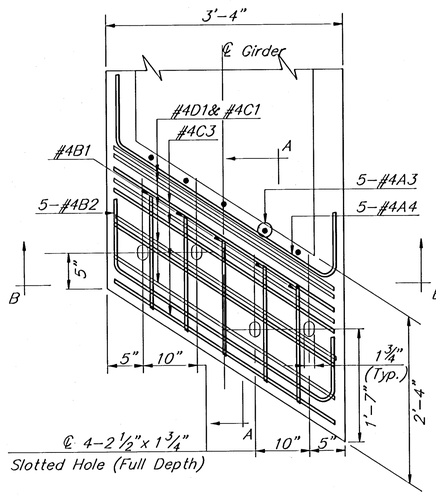

PLAN VIEW OF GIRDER END

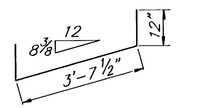

#4B2, #4A4 & #4A6

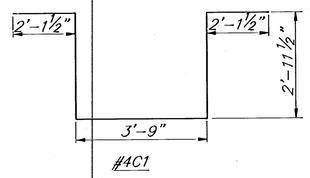

#4C1

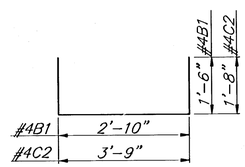

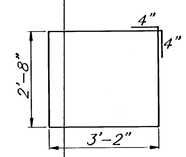

#4D1

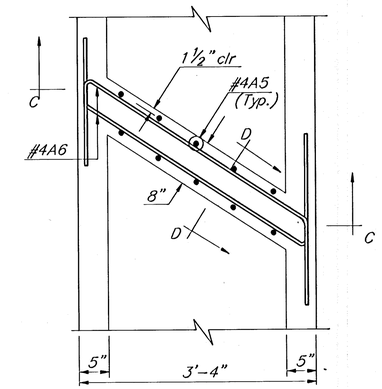

PLAN VIEW @ INTERMEDIATE DIAPHRAGM

NOTE: The dimensions shown on bending diagrams are out to out of bars unless otherwise noted.

BAR LIST - FOR INFORMATION ONLY

SPAN 1, 3 LISTED FOR ONE (4-Req'd.)				SPAN 2 LISTED FOR ONE (2-Req'd.)			
MARK	NO.	SIZE	LENGTH	MARK	NO.	SIZE	LENGTH
A1	6	5	21'-2"	A3	10	4	3'-0"
A2	27	4	21'-2"	A4	10	4	5'-8"
A3	10	4	3'-0"	A5	10	4	3'-0"
A4	10	4	5'-8"	A6	10	4	5'-8"
A5	10	4	3'-0"	A7	6	5	24'-2"
A6	10	4	5'-8"	A8	27	4	24'-2"
B1	10	4	5'-10"	B1	10	4	5'-10"
B2	10	4	5'-8"	B2	10	4	5'-8"
C1	64	4	13'-11"	C1	75	4	13'-11"
C2	56	4	7'-1"	C2	65	4	7'-1"
C3	65	4	8'-0½"	C3	74	4	8'-0½"
D1	10	4	12'-4"	D1	10	4	12'-4"

(All bars shall be epoxy coated, Gr. 60)

CITY OF WICHITA

GEORGE WASHINGTON BLVD. BRIDGE OVER GYPSUM CREEK

SIDEWALK GIRDER DETAILS III

CITY OF WICHITA PROJ. NO.: 472-82156

Booker ASSOCIATES INC. OF KANSAS
Wichita Kansas

SCALE | DATE June, 1992 | DWG. NO. K9331BR

SURV. — | PLOT CADD | DES. R.G./A.H. | DR. RSB | TR. — | CKD. RG | APP. SKB

\K9331BR\SWKGDET3
SCALE 1"=1'