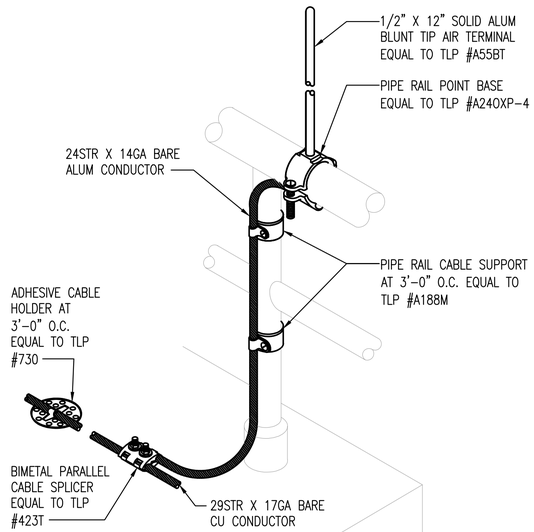

9 AIR TERMINAL AT PIPE RAIL
NOT TO SCALE

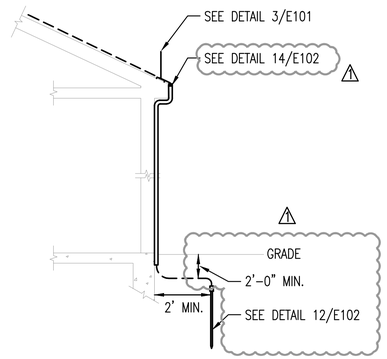

10 DOWNLEAD TO GROUND – PITCHED ROOF
NOT TO SCALE

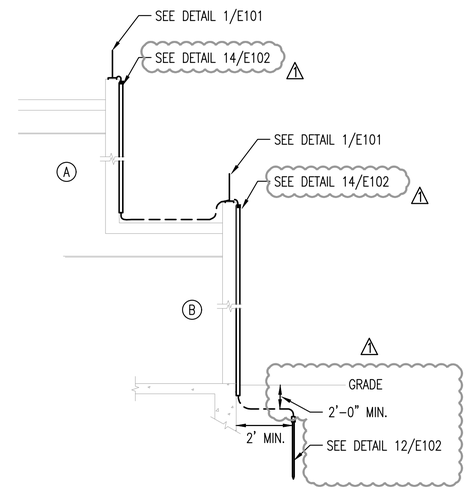

11 DOWNLEAD TO GROUND – FLAT ROOF
NOT TO SCALE

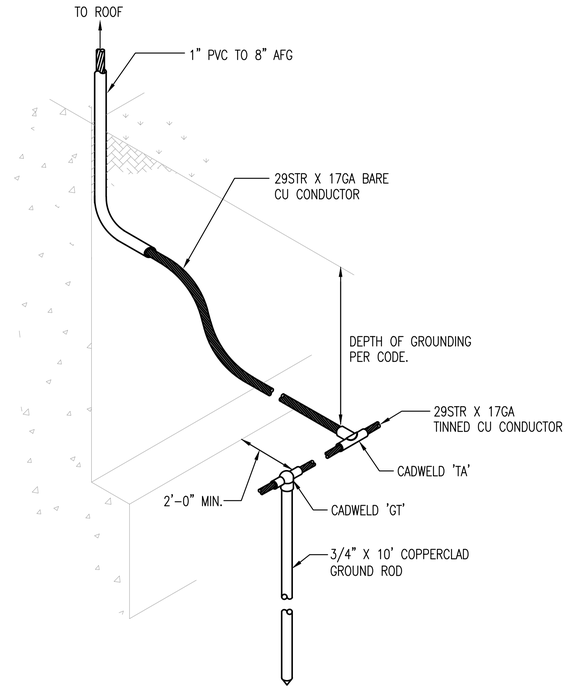

12 GROUND ROD CONNECTION
NOT TO SCALE

NOTE: ALL CONDUIT/EXPOSED CABLE MUST BE SUPPORTED AT MAX. 36" O.C. AND CANNOT BE SECURED IN MORTAR JOINTS –MUST MAINTAIN 8" MIN. RADIUS BENDS. CONDUIT "LB'S" AND PRE-MADE 1" CONDUIT 90° BENDS ARE NOT PERMITTED.

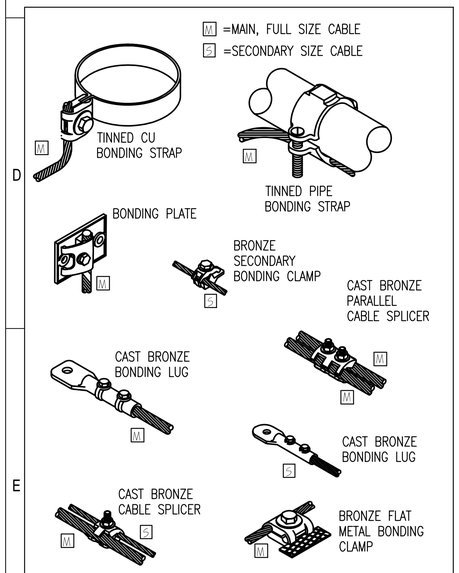

TYPICAL BONDING & SPLICING DETAILS

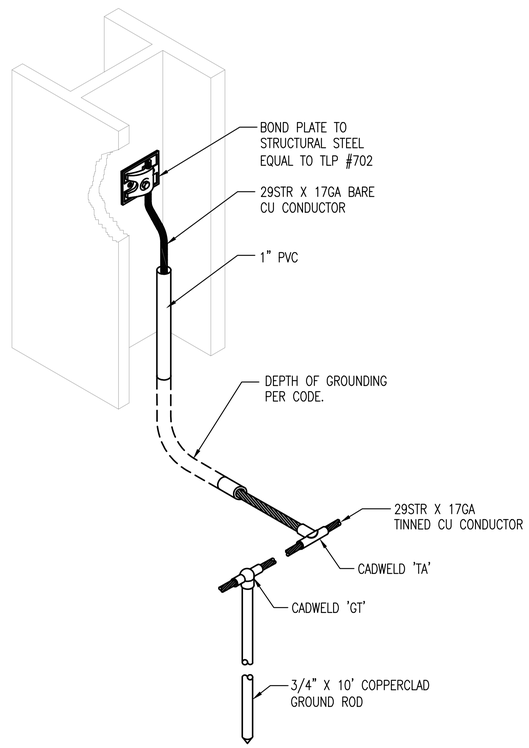

13 GROUND ROD CONNECTION TO BUILDING STEEL
NOT TO SCALE

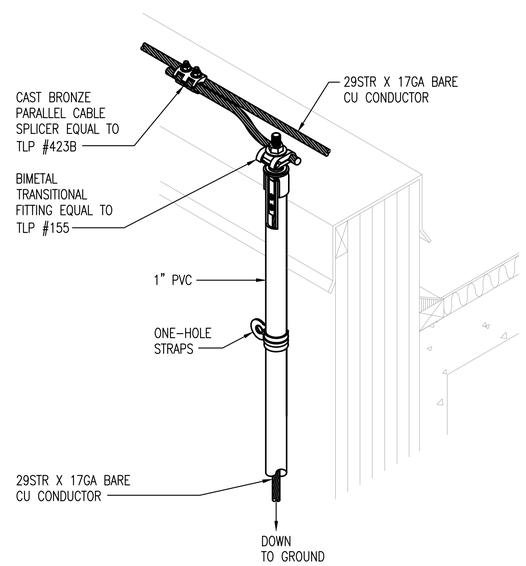

14 DOWNLEAD AT ENDWALL
NOT TO SCALE

PEC
PROFESSIONAL ENGINEERING CONSULTANTS
303 SOUTH TOPEKA
WICHITA, KS 67202
316-262-2691 www.pec1.com

CITY OF WICHITA

CHRISTOPHER J. VAIL LICENSED 25693 01/26/2021 KANSAS PROFESSIONAL ENGINEER

PLANT TWO - UV LIGHTNING PROTECTION
CITY OF WICHITA, KANSAS

Issue:		
1	REVISION #1	11/3/20

JOB NO.	197043-009
DATE	JANUARY 2021
PM	RWW
DESIGNED BY	CJV
DRAWN BY	ABP
CHECKED BY	SMS

ELECTRICAL DETAILS

E102

Saved 11-04-2020 11:55:03 AM by CHRIS.VAIL
Plot Scale 1:1 01-26-2021 8:02:28 AM by CHRIS.VAIL
U:\Wichita-Civil\2019\197043\009\Elec\Drawings\197043-009 - E102 ELECTRICAL DETAILS