NOTES:

1. AT WALLS OF 2 OR MORE COURSES IN HEIGHT, INSTALL BOTTOM LEDGE OF COTTONWOOD LIMESTONE UPSIDE DOWN (FROM QUARRIED POSITION).
2. CLASS III CONCRETE SHALL BE USED FOR GRADE BEAMS & PIERS.
   UNIT STRESSES:
   CONCRETE F'_c = 3000 P.S.I. (GRADE BEAM)
3. SEE SHEET W-3 FOR REINFORCING STEEL REQUIREMENTS.

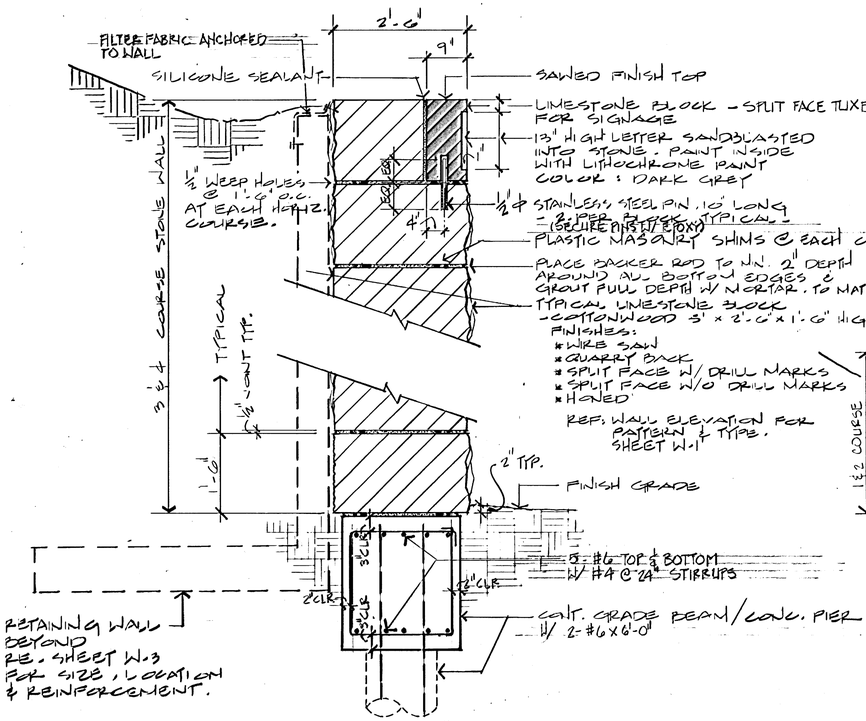

A Wall Section
3/4" = 1'-0"

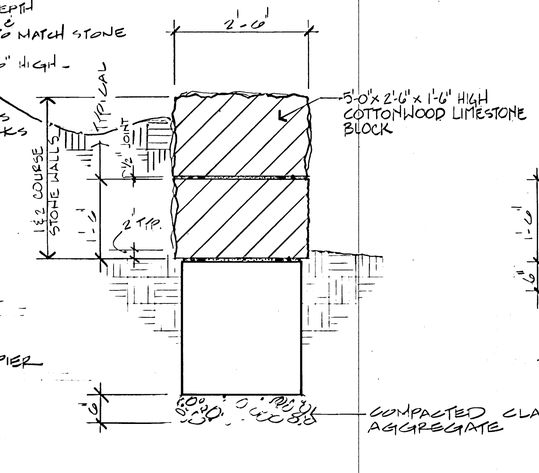

B Wall Section
3/4" = 1'-0"

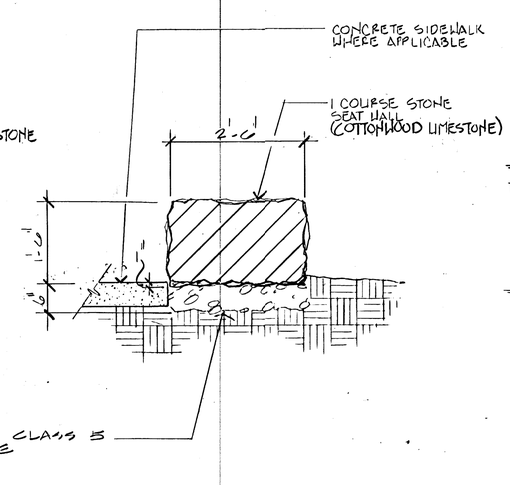

C Wall Section - Alt. #1
3/4" = 1'-0"

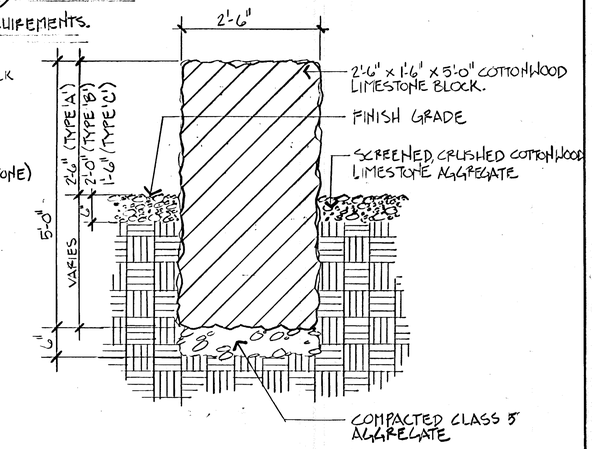

D Wall Section - Alt. #2
3/4" = 1'-0"

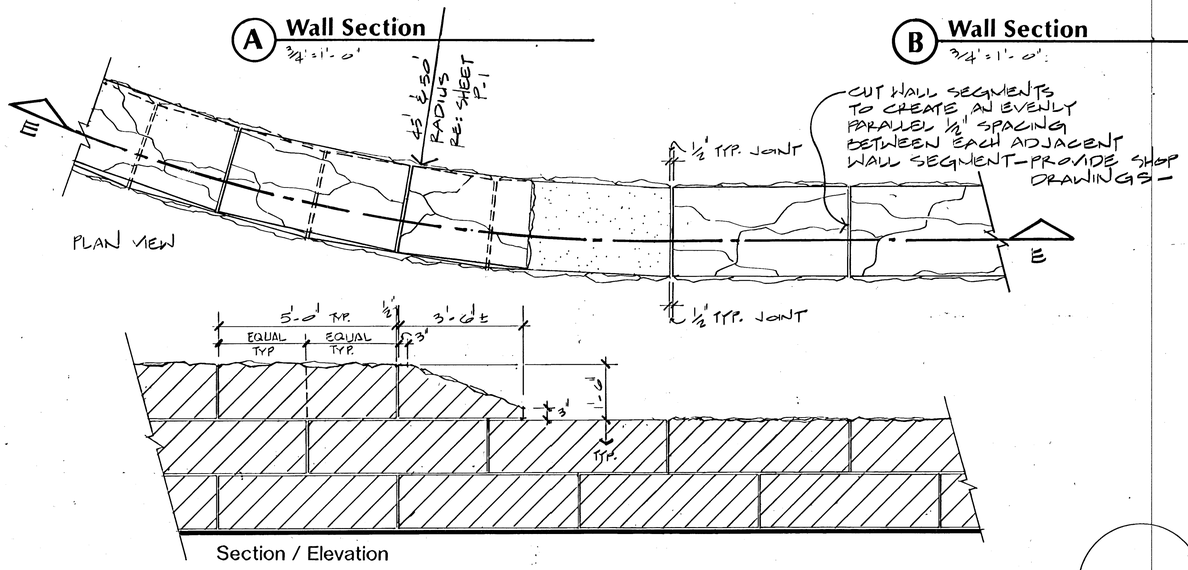

Section / Elevation

E Wall Section
½" = 1'-0"

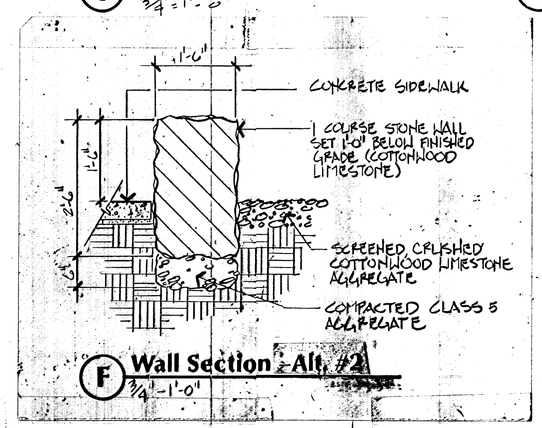

F Wall Section - Alt. #2
3/4" = 1'-0"

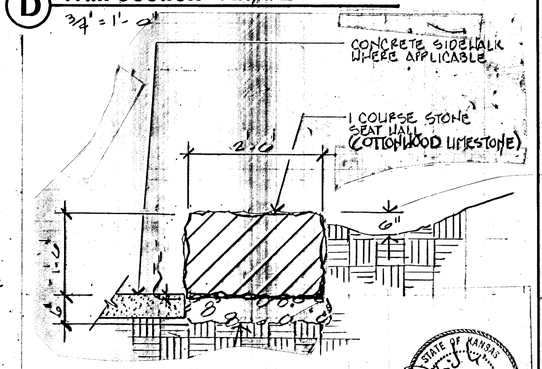

G Wall Section
3/4" = 1'-0"

STATE OF KANSAS DAVID ONKEY 2360 REGISTERED LANDSCAPE ARCHITECT
Oct. 4, 1994

REV.	DATE	DESCRIPTION
△		
△		
△		
△		
△		

THE CITY OF WICHITA SEDGWICK COUNTY, KANSAS

HELLMUTH, OBATA & KASSABAUM, Inc.
DALLAS, TEXAS

PROFESSIONAL ENGINEERING CONSULTANTS, PA
WICHITA, KANSAS

BRAD J. GOLDBERG, Artist
DALLAS, TEXAS

DRAWN BY: | APPROVED BY:

MID-AMERICA ALL-INDIAN CENTER
SITE IMPROVEMENTS
CITY OF WICHITA, KANSAS

SHEET TITLE: ART WALL

PROJECT #:	ISSUE DATE:	SCALE:	SHEET:
92-036-122			W-2