SHEET NO.	TOTAL SHEETS
C51	131

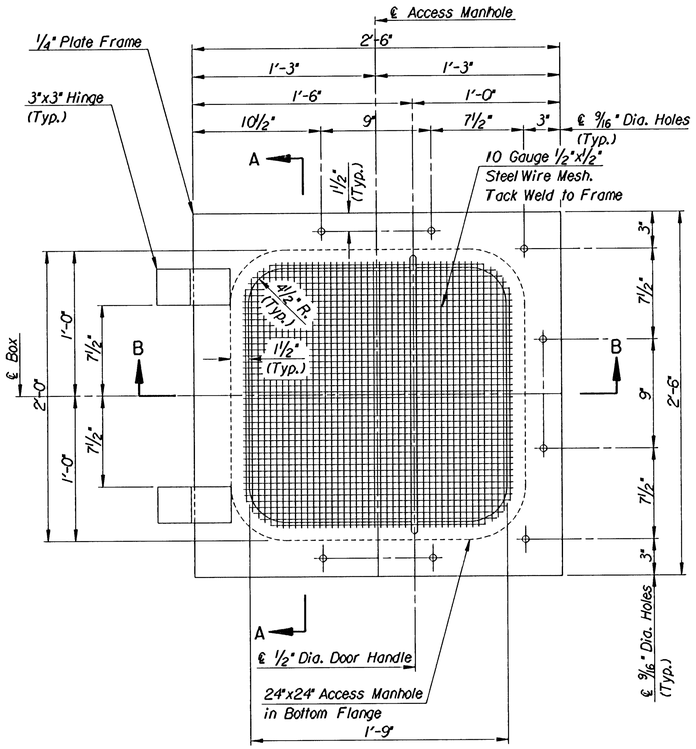

ACCESS MANHOLE DOOR PLAN

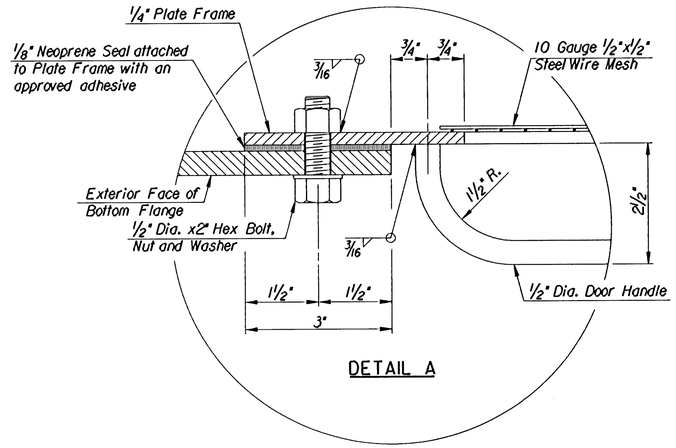

DETAIL A

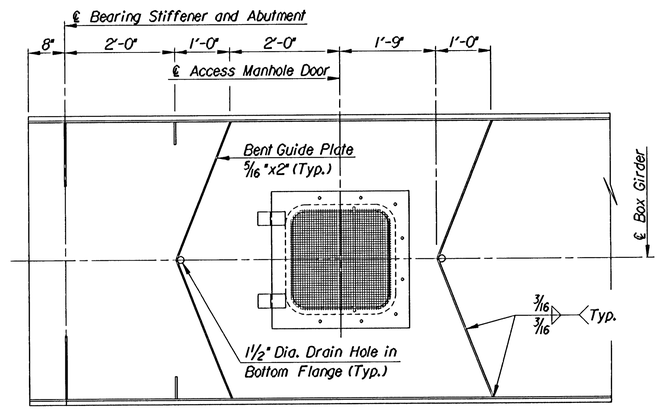

BOTTOM FLANGE AT END OF BOX

Note:
Drain Holes and Guide Plates are Required at each end of each Box.

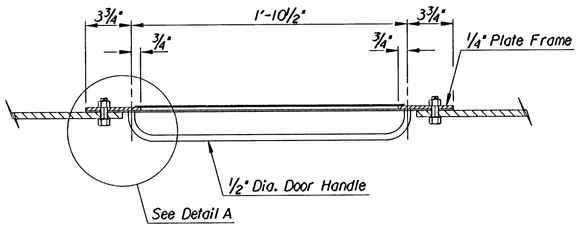

SECTION A-A

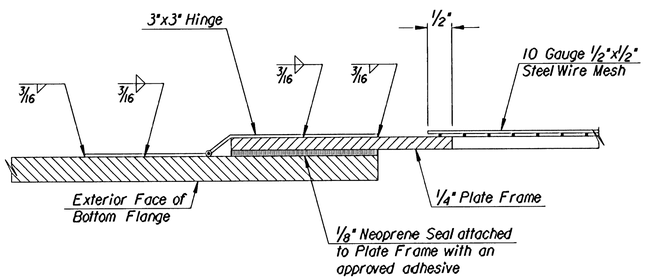

SECTION B-B

Note:
The Plate Frame Shall be A709 (Grade 36) Steel and paid for under "Structural Steel, A709 (Gr. 36)". Hinges, Door Handle, Steel Wire Mesh, Neoprene Seal, Hex Bolts, Nuts and Washers shall be subsidiary to "Structural Steel, A709 (Gr. 36).

No.	Revisions	By	Date
1			

CITY OF WICHITA, KANSAS
MICHAEL E. LINDEBAK, P.E.-CITY ENGINEER
DOUGLAS AVENUE BRIDGE
OVER ARKANSAS RIVER

ACCESS DOOR DETAILS

CITY OF WICHITA PROJECT NO. 472-82721

PROFESSIONAL ENGINEERING CONSULTANTS, P.A.
ENGINEERS
WICHITA, KANSAS

Designed by	P.D.F.	Checked by	R.A.S.		
Drawn by	W.L.L.	Date	Sept. 1997	Job No.	95088-4

C51

I:/1995/95088/douglas/akcsdoor.dgn
Drawn by: wll
Plotted by: ras 8-26-97