SHEET NO.	TOTAL SHEETS
C66	131

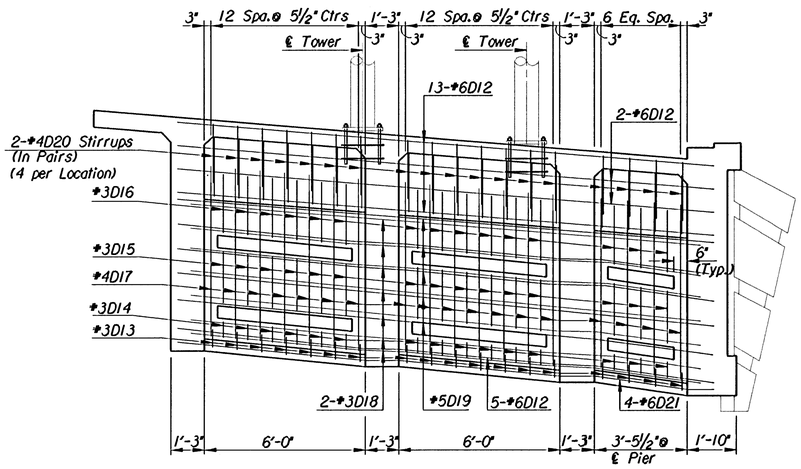

PIER DIAPHRAGM AT
PIER #2 OR #3

#6D12 and #5D19 extend into exterior beams 1'-0"
#3D18 extend into exterior beams 6"

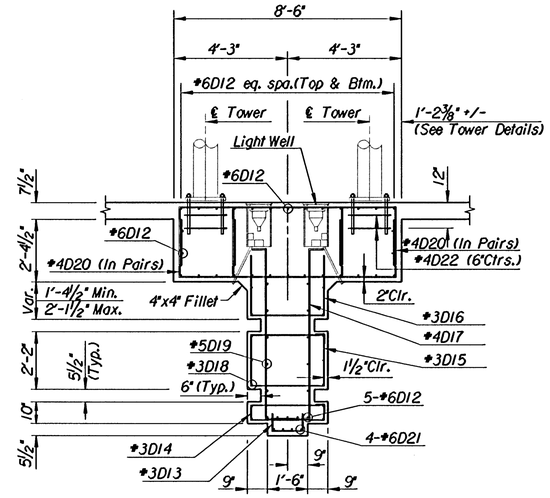

Note:
Light Wells shall be drained by the installation of a 3/4" Dia. P.V.C. Pipe with the outfall located a minimum of 6" beyond the footprint of the Pier and extending 1" below the bottom surface of the slab. Reference Arch. Sheets A7 and A8 for Tower Base Details.

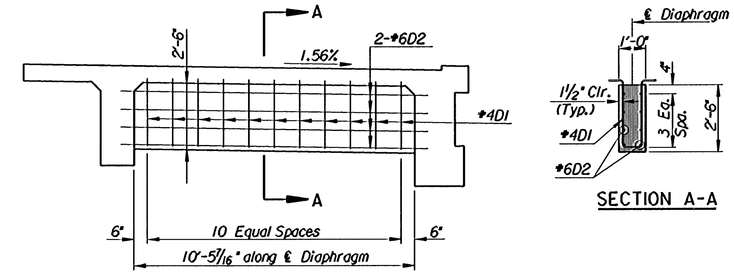

SECTION A-A

INTERMEDIATE DIAPHRAGM - SPAN #1 OR #5

#6D2 extend into exterior beams 6"
(Total of 4 Required)

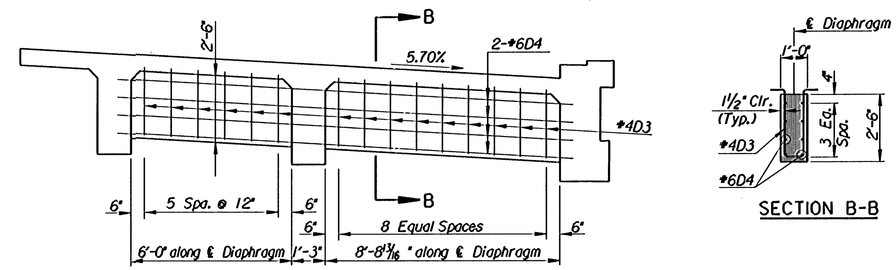

SECTION B-B

INTERMEDIATE DIAPHRAGM - SPAN #2 OR #4

#6D4 extend into exterior beams 6"
(Total of 4 Required)

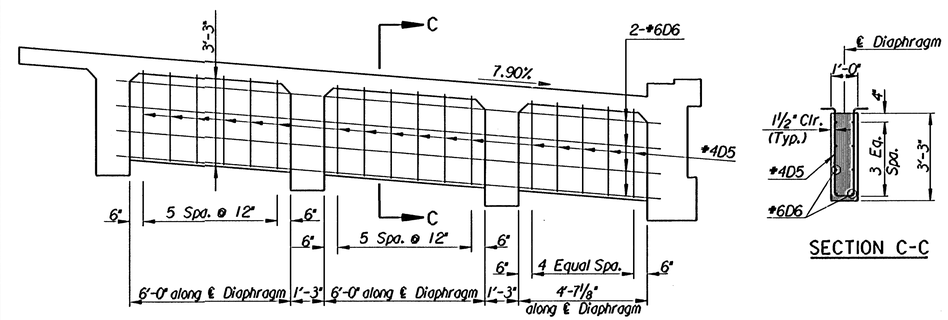

SECTION C-C

INTERMEDIATE DIAPHRAGM - SPAN #3

#6D6 extend into exterior beams 6"
(Total of 4 Required)

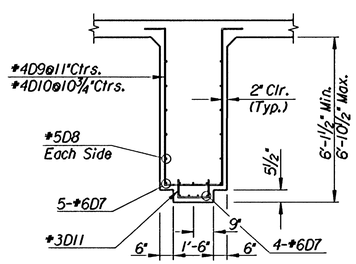

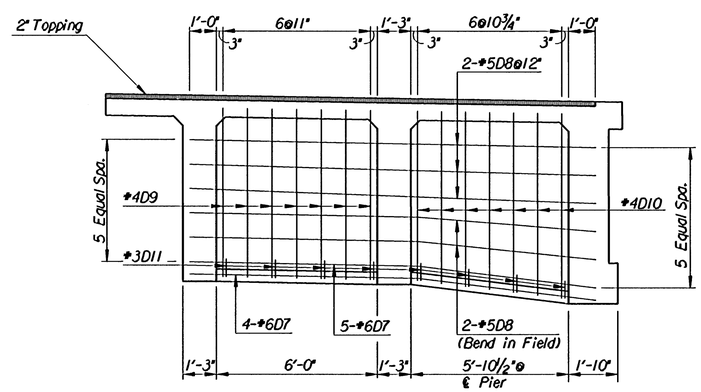

PIER DIAPHRAGM AT
PIER #1 OR #4

No.	Revisions	By	Date
1			

CITY OF WICHITA, KANSAS
MICHAEL E. LINDEBAK, P.E.-CITY ENGINEER
DOUGLAS AVENUE BRIDGE
OVER ARKANSAS RIVER
SIDEWALK DIAPHRAGMS

CITY OF WICHITA PROJECT NO. 472-82721

PROFESSIONAL ENGINEERING CONSULTANTS, P.A.
ENGINEERS
WICHITA, KANSAS

Designed by	R.A.S./P.D.F.	Checked by	R.A.S.
Drawn by	J.G.P.	Date Sept. 1997	Job No. 95088-4

I:/1995/95088/douglas/wkdiaphd.dgn
Drawn by: Jgp
Plotted by: ras 3-14-98