SHEET NO.	TOTAL SHEETS
A6	131

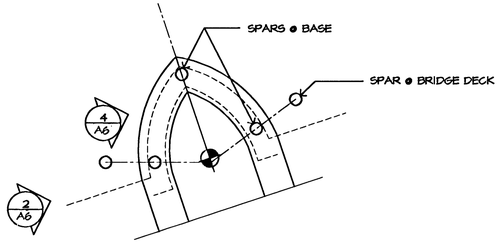

REFERENCE ONLY - ROTATED TO SHOW SIDE SPAR IN TRUE ELEVATION

1 TOWER PLAN

0' 2' 4' 6'
1/4"=1'-0"

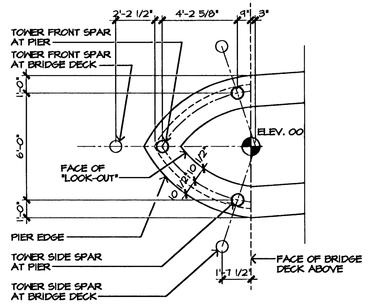

3 TOWER PLAN

0' 2' 4' 6'
1/4"=1'-0"

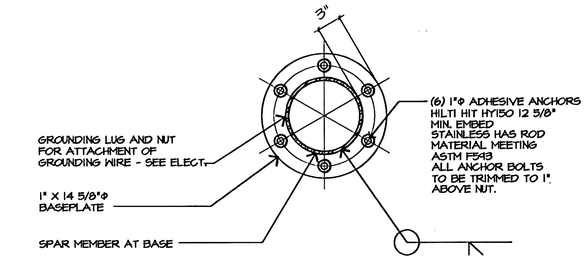

5 BASE PLATE

0' 3" 6" 9" 1'
1 1/2"=1'-0"

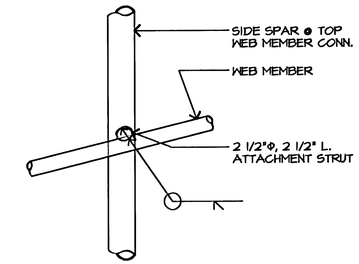

8 TOP ROD/SPAR INTERSECTION

0' 6" 1' 2'
3/4"=1'-0"

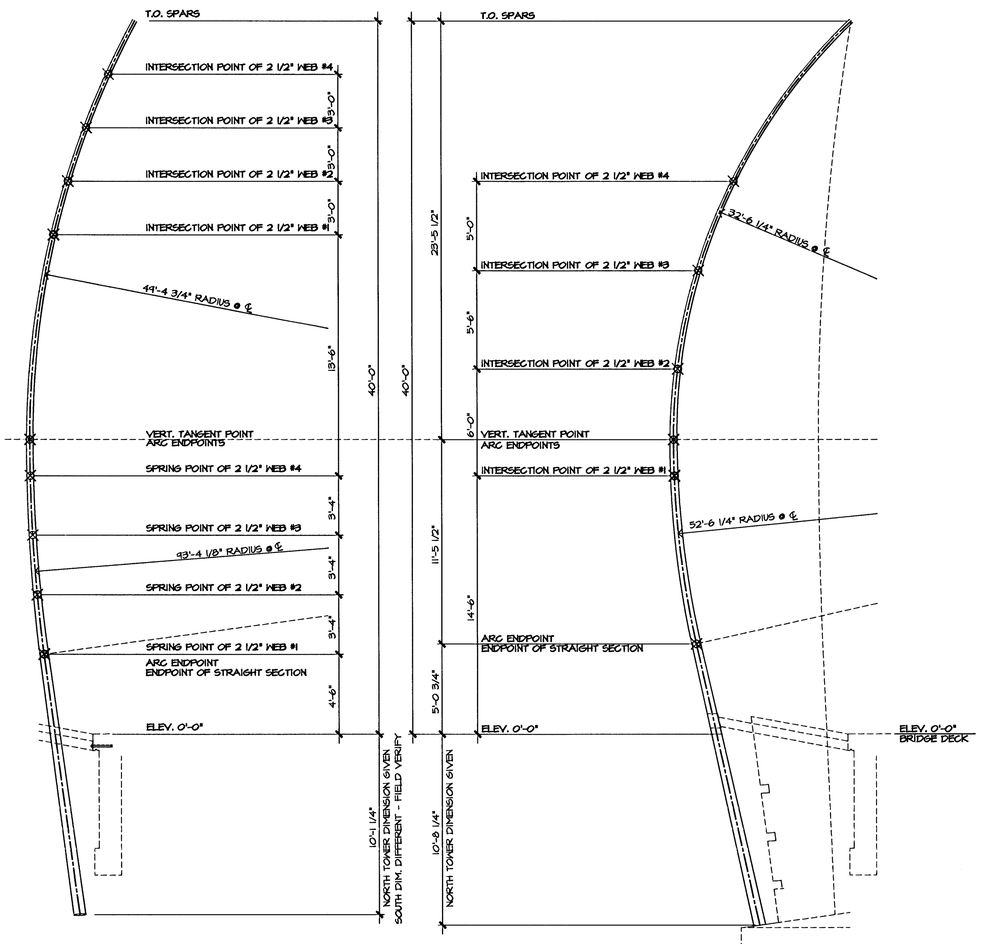

2 SIDE SPAR ELEVATION

0' 2' 4' 6'
1/4"=1'-0"

4 FRONT SPAR ELEVATION

0' 2' 4' 6'
1/4"=1'-0"

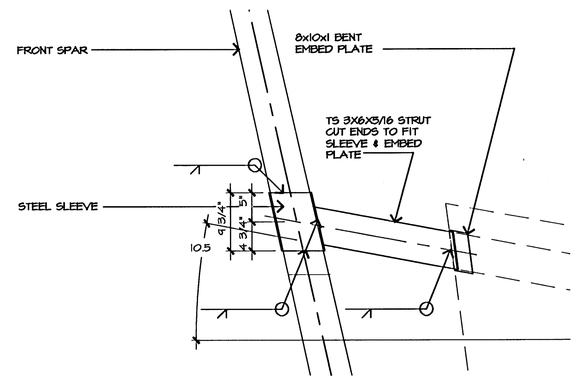

6 FRONT SPAR STRUT

0' 6" 1'
1"=1'-0"

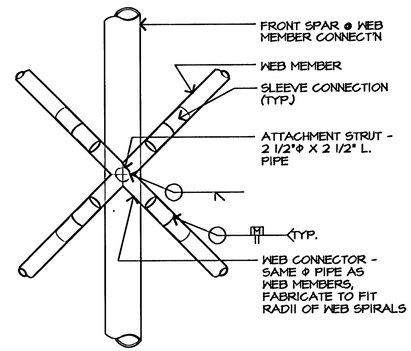

9 MID ROD/SPAR INTERSECTION

0' 6" 1' 2'
3/4"=1'-0"

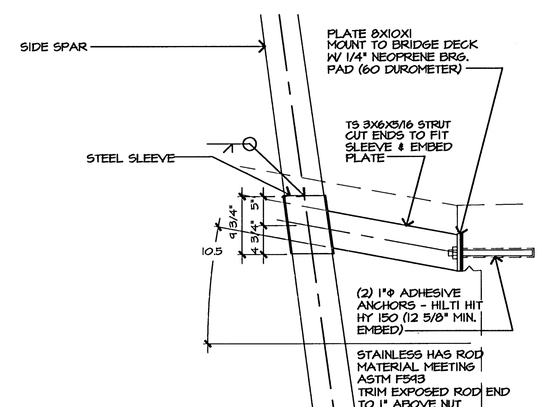

7 SIDE SPAR STRUT

0' 6" 1'
1"=1'-0"

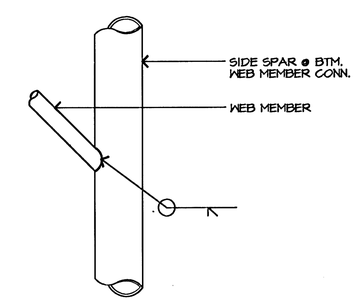

10 LOW ROD/SPAR INTERSECTION

0' 6" 1' 2'
3/4"=1'-0"

DETAIL NOTE:

DETAILS SHOWN INDICATE VISUAL DESIGN INTENT. AT THEIR OPTION, FABRICATOR MAY PROPOSE ALTERNATE DETAILS FOR REVIEW DURING SUBMITTAL STAGE OF CONSTRUCTION.

No.	Revisions	By	Date
1			

RONALD L. BROWN LICENSED 8891 9/15/97 KANSAS PROFESSIONAL ENGINEER

GossenLivington Architecture
4205 South Grapevine
Wichita, KS 67202
Tel (316) 265-9367
Fax (316) 265-3646

VICKI SCURI SITEWORKS
1208 NE 128 ST.
Seattle, WA 98125-7028

CITY OF WICHITA, KANSAS
MICHAEL E. LINDEBAK, P.E.–CITY ENGINEER
DOUGLAS AVENUE BRIDGE
OVER ARKANSAS RIVER

LEWIS BRIDGE TOWER DETAILS

CITY OF WICHITA PROJECT NO. 472-82721

PROFESSIONAL ENGINEERING CONSULTANTS, P.A.
ENGINEERS
WICHITA, KANSAS

Designed by	VA/JPB	Checked by	JPB
Drawn by	JPB	Date 9/12/97	Job No. 95088-4

FILE:F:\900\020\DWG\A6