FHWA REGION NO.	STATE	PROJECT NO.	FISCAL YEAR	SHEET NO.	TOTAL SHEETS
7	KS	87-N-0033.01	1995	12	34

NOTE: INLET TOP REINFORCING SHALL BE SPACED ON 6" MAX. CENTERS. INLET LIDS SHALL BE NOTCHED OUT AS INDICATED TO FACILITATE CONSTRUCTION OF CURB.

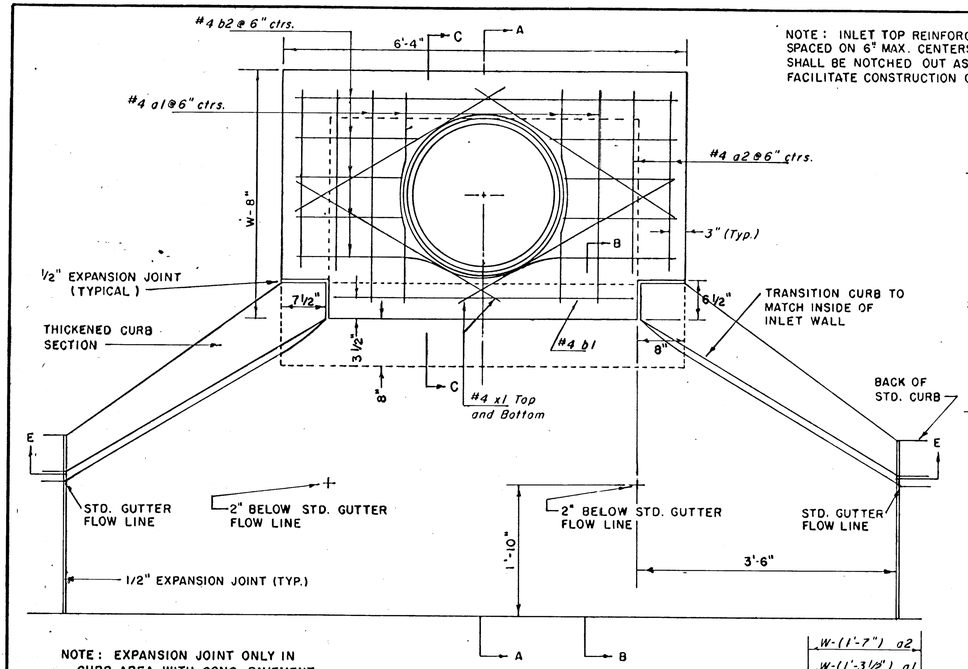

NOTE: EXPANSION JOINT ONLY IN CURB AREA WITH CONC. PAVEMENT.

PLAN

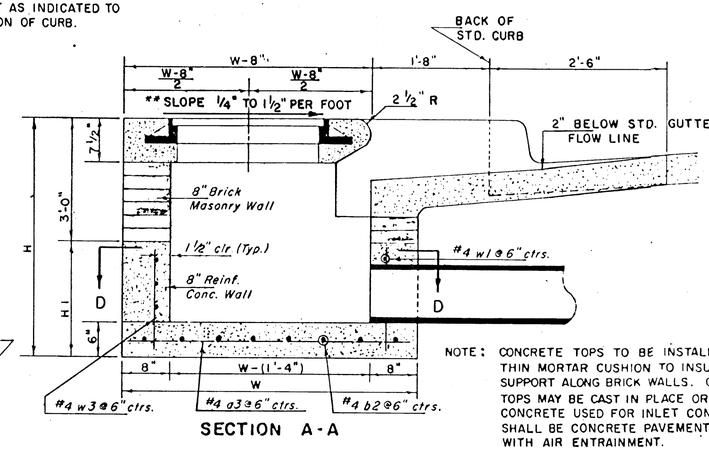

SECTION A-A

NOTE: CONCRETE TOPS TO BE INSTALLED ON THIN MORTAR CUSHION TO INSURE FULL SUPPORT ALONG BRICK WALLS. CONCRETE TOPS MAY BE CAST IN PLACE OR PRECAST. CONCRETE USED FOR INLET CONSTRUCTION SHALL BE CONCRETE PAVEMENT MIX WITH AIR ENTRAINMENT.

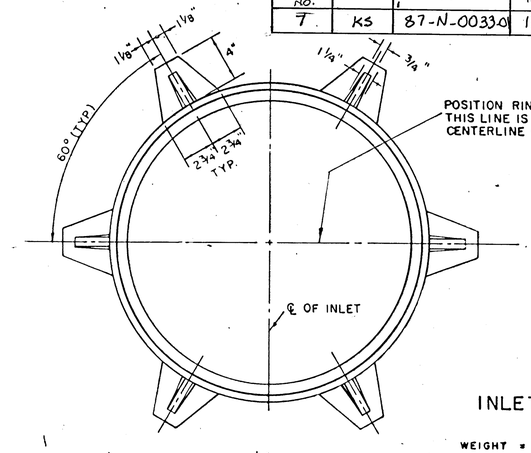

INLET FRAME

WEIGHT = 180 LBS.

SEE CITY OF WICHITA STANDARD MANHOLE FRAME AND COVER DETAIL SHEET FOR COVER DETAILS TO BE USED WITH INLET FRAME.

NOTE: CONTRACTOR SHALL HAVE THE OPTION OF CONSTRUCTING 8" BRICK MASONRY WALLS BETWEEN THE CONCRETE INLET BASE AND TOP ON THIS INLET WHEN W = 6'4" AND H = 7'0" OR LESS.

ADDITIONAL CURB AND GUTTER CONSTRUCTION NECESSARY TO CONNECT SET-BACK INLET TO PAVEMENT WILL BE PAID FOR AT THE UNIT PRICE BID FOR EACH INLET HOOKUP.

INLET INVERT SHALL BE SHAPED WITH 8 SACK SAND MIX CONCRETE TO CREATE FLOW CHANNELS AND TO INCREASE HYDRAULIC EFFICIENCY SUCH THAT THE INLET WILL BE SELF CLEANING BETWEEN ALL INLET AND/OR OUTLET PIPES.

THE ENDS OF ALL PIPES INSTALLED IN INLETS SHALL BE CUT OFF FLUSH WITH THE INSIDE FACE OF THE INLET WALL.

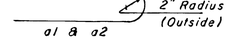

BENDING DIAGRAM

PRECAST SLAB AND FLOOR REINFORCING											
		W=4'-4"		W=5'-4"		W=6'-4"		W=7'-4"		W=8'-4"	
Mark	Size	No.	Length	No.	Length	No.	Length	No.	Length	No.	Length
*a1	#4	6	6'-7"	6	8'-7"	6	10'-7"	6	12'-7"	6	14'-7"
a2	#4	4	6'-0"	4	8'-0"	4	10'-0"	4	12'-0"	4	14'-0"
a3	#4	13	4'-1"	13	5'-1"	13	6'-1"	13	7'-1"	13	8'-1"
b1	#4	1	4'-9"	1	4'-9"	1	4'-9"	1	4'-9"	1	4'-9"
*b2	#4	23	6'-1"	29	6'-1"	35	6'-1"	41	6'-1"	47	6'-1"
x1	#4	8	3'-10"	8	4'-2"	8	4'-6"	8	4'-10"	8	5'-2"
WALL REINFORCING											
		W=4'-4"		W=5'-4"		W=6'-4"		W=7'-4"		W=8'-4"	
Mark	Size	No.	Length	No.	Length	No.	Length	No.	Length	No.	Length
w1	#4	①	6'-1"	①	6'-1"	①	6'-1"	①	6'-1"	①	6'-1"
w2	#4	①	4'-1"	①	5'-1"	①	6'-1"	①	7'-1"	①	8'-1"
w3	#4	32	②	36	②	40	②	44	②	48	②

* Field bend or cut Reinforcing as required for clearance.

① 4(H1-12") ; (H1-12") Round down to nearest 0.5'

② H1-3"

STANDARD CURB INLET PRECAST TOPS			
W	PRE-CAST TOP SIZE	PIPE SIZE	CU. YD. CONC.
4' 4"	3'8"x 6'4" x7 1/2"	21" & SMALLER	0.38 ±
5' 4"	4'8"x 6'4" x7 1/2"	24" & 30"	0.51 ±
6' 4"	5'8"x 6'4" x7 1/2"	36" & 42"	0.64 ±
7' 4"	6'8"x 6'4" x7 1/2"	48" & 54"	0.77 ±
8' 4"	7'8"x 6'4" x7 1/2"	60" & 66"	0.90 ±

**NOTE: Slope of Inlet Tops to match Sidewalk or Parking Slopes within Limits indicated.

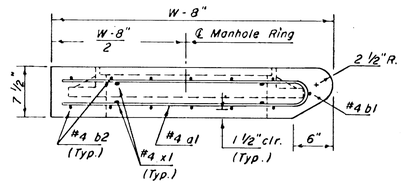

SECTION C-C

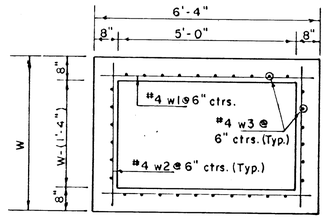

SECTION D-D

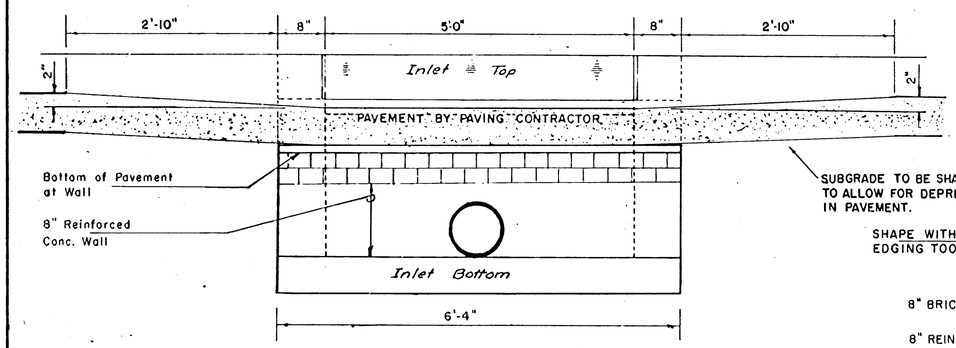

SECTION E-E

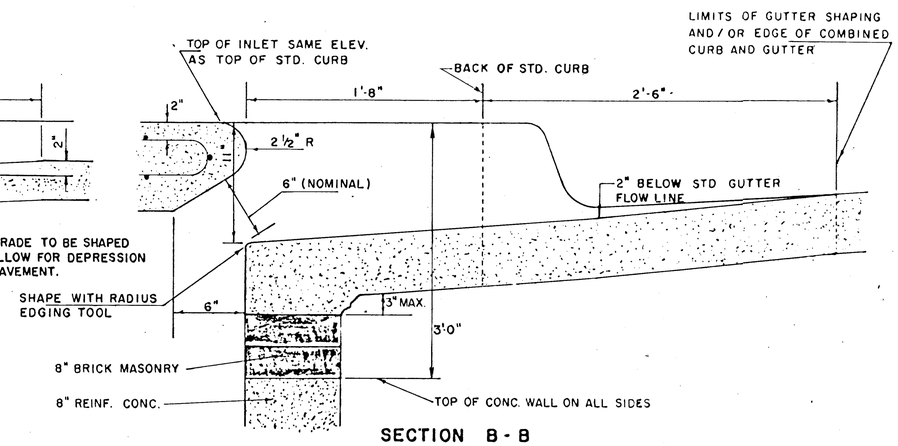

SECTION B-B

~~REVISED 11-30-1988~~

~~REVISED 12-21-1984~~

Revised 2-16-1989

DETAIL STANDARD TYPE IA CURB INLET

CITY OF WICHITA, KANSAS

INLET OPENING = 6" × 5' 0"

JUNE 1984