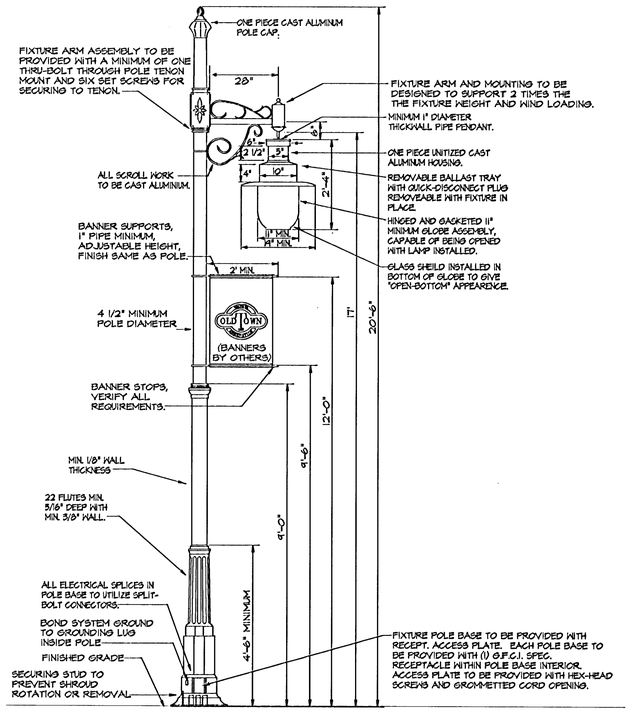

STREET LIGHT FIXTURE "F"

N.T.S.

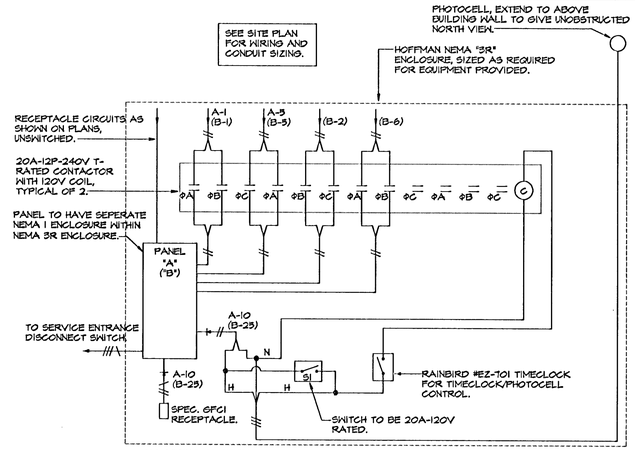

ALL WIRING TO BE #12 MINIMUM, ALL CONDUIT TO BE 3/4" MINIMUM UNLESS NOTED OTHERWISE.

CONTROL CABINET "A" & "B" WIRING DETAIL

NO SCALE

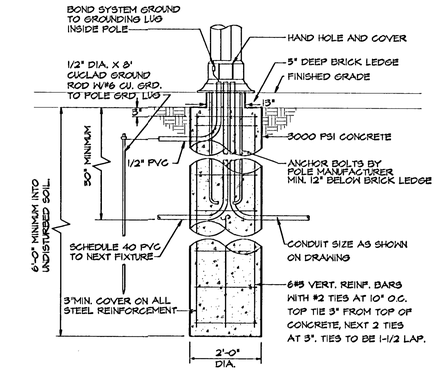

POLE BASE DETAIL WITH BRICK LEDGE

N.T.S.

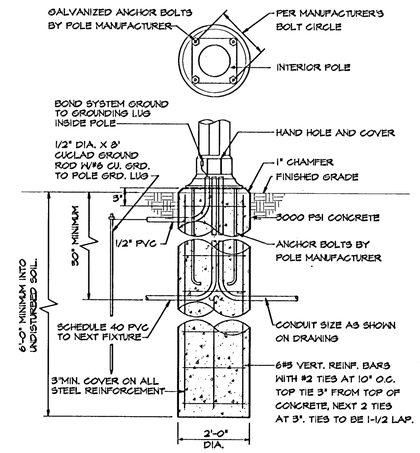

POLE BASE DETAIL

N.T.S.

GENERAL NOTES:

1. ALL CONDUITS TO BE ROUTED MINIMUM 30" BELOW GRADE.
2. E.C. SHALL VISIT JOBSITE PRIOR TO BID AND VERIFY ALL EXISTING CONDITIONS AND REQUIREMENTS.
3. E.C. TO CLOSELY COORDINATE ELECTRICAL INSTALLATION WITH PAVING AND CONCRETE WORK ON THIS PROJECT.
4. E.C. TO VERIFY ALL SERVICE ENTRANCE CONNECTIONS REQUIREMENTS WITH K.G.&E. PRIOR TO BID.
5. NEW LIGHT FIXTURE "A" TO MATCH EXISTING LIGHTING FIXTURES IN OLD TOWN AREA.
6. ALL CONDUITS BELOW GRADE TO BE SCH. 40 PVC. WITH STEEL ELLS AND RISERS.
7. ALL POLE BASES BASE CONCRETE WORK ASSOCIATED WITH ELECTRICAL INSTALLATION TO BE THE RESPONSIBILITY OF THE ELECTRICAL CONTRACTOR.

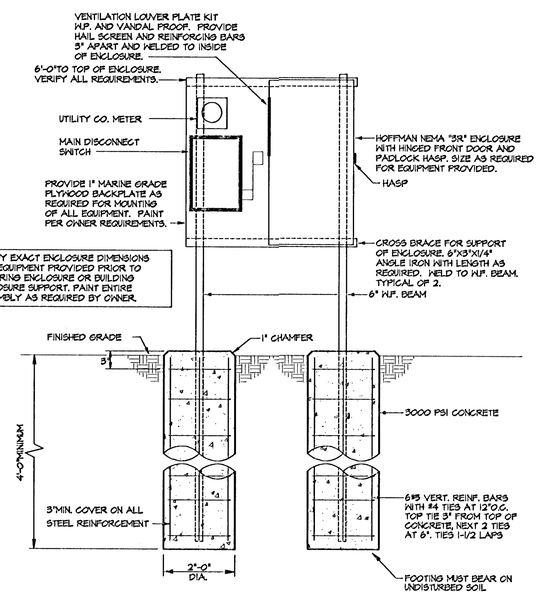

CONTROL PANEL ENCLOSURE DETAIL FOR PANEL "A" & "B"

NO SCALE

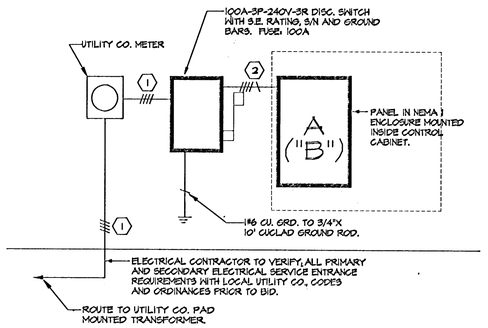

SERVICE ENTRANCE RISER DIAGRAM - PANEL "A" & "B"

NO SCALE

FEEDER SCHEDULE

FEEDER IDENT.	CONDUCTORS			GROUND SIZE	ISOLATED GROUND SIZE	CONDUIT SIZE
	SETS	QUANT. PER SET	SIZE	PER SET		PER SET
1	1	4	#3 THHN	-----	-----	1 1/4"
2	1	4	#3 THHN	#8	-----	1 1/4"
3	1	6	#6 THHN	#10	-----	1"
4	1	5	#8 THHN	#10	-----	1"
5	1	4	#10 THHN	#10	-----	3/4"
6	1	5	#10 THHN	#10	-----	3/4"
7	1	8	#6 THHN	#10	-----	1 1/4"

BRANCH CIRCUIT PANEL SUMMARY

| PANEL DESIG. | 120/240V. 3Ø/4W. | 277/480V. 3Ø/4W. | | MAINS RATING (AMPS) MLO | BKR | MOUNTING S | F | BRANCH CIRCUIT BREAKERS (AMPS/POLE) STATUS | 20/1 | 20/2 | | | | | |