| FHWA REGION NO. | STATE | PROJECT NO. | YEAR | SHEET NO. | TOTAL SHEETS |
|---|---|---|---|---|---|
| 7 | KANSAS | 87 N-0061-01 | 1998 | 18 | 91 |

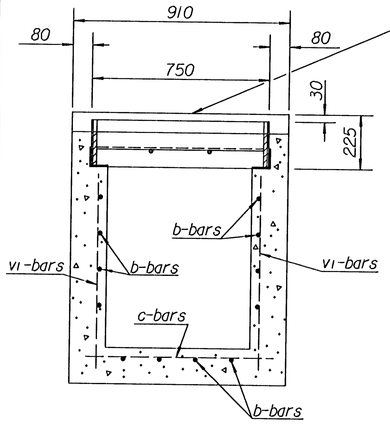


SECTION D-D

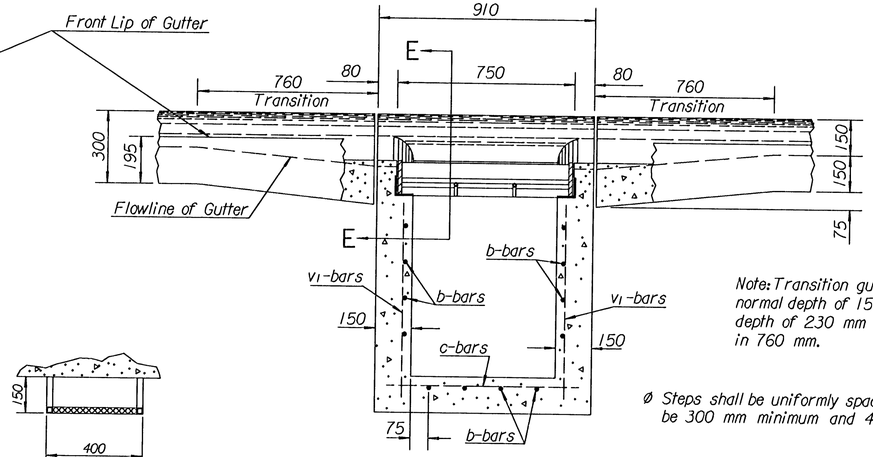


SECTION C-C

Note: Transition gutter from normal depth of 150 mm to depth of 230 mm at inlet in 760 mm.

Ø Steps shall be uniformly spaced. Spacing shall be 300 mm minimum and 420 mm maximum.

Note: All reinforcing shall be #13 at 150 mm centers except where noted. Minimum clear distance to reinforcement shall be 40 mm .

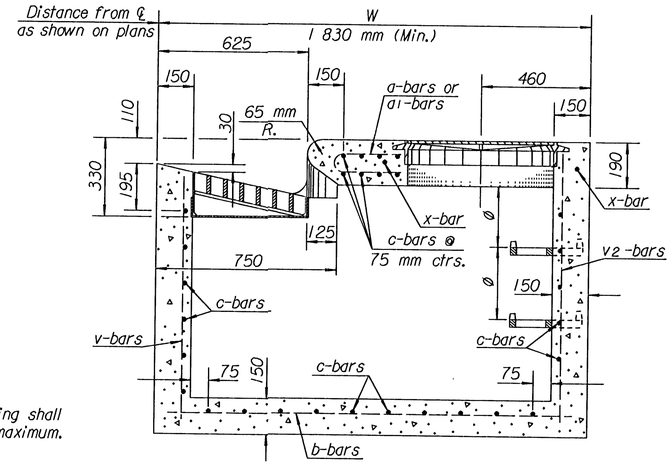


SECTION A-A

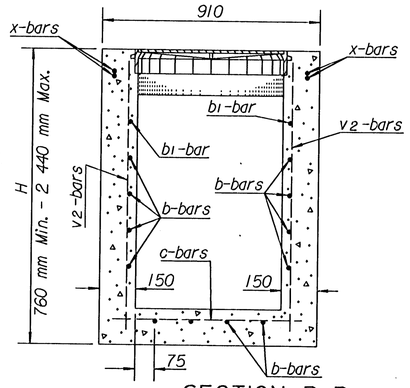


SECTION B-B

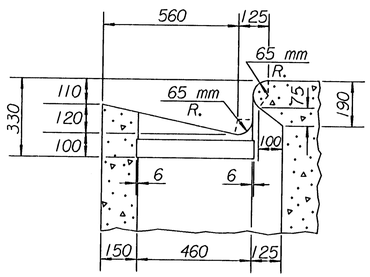


SECTION E-E

(Reinforcing steel not shown.)

STEP DETAILS

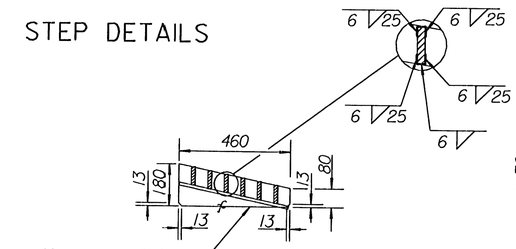


‡ Hot or cold poured Joint sealing compound, or premolded Exp. Jt. Filler (Nonextruding, Type B).

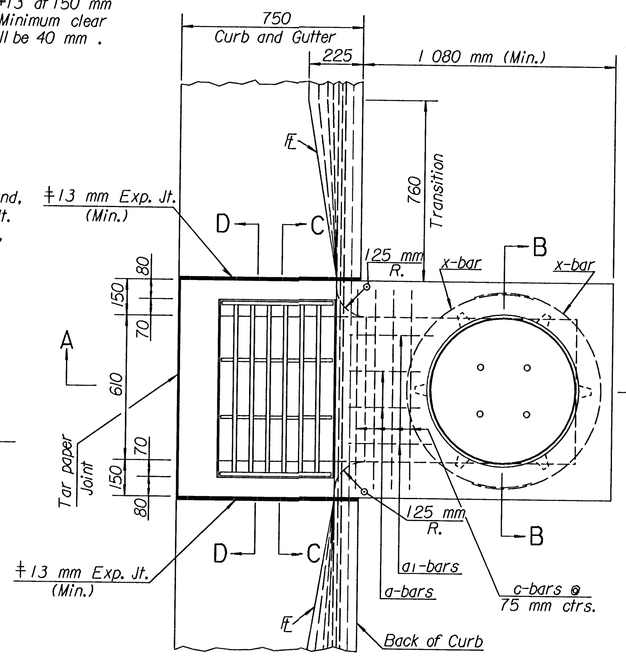


PLAN AND PART SECTION

GENERAL NOTES

Class A Concrete, Class A Concrete (AE), or the mix used in Concrete Pavement, at the Contractor's option, shall be used throughout.

All exposed edges shall be finished with an edging tool.

Reinforcing bars shall be bent around pipe.

No reduction in concrete quantities shall be made for pipe openings.

When directed by the Engineer, a small opening in the back of the inlet shall be provided in order to drain a low area. Reinforcing bars shall extend through the opening. No reduction in concrete quantities will be made for this opening.

When directed by the Engineer, the top of the inlet shall be sloped slightly to approximately fit the ground line or other conditions.

The floor of the inlet shall be shaped as shown in various "EXAMPLES" on Reinforced Concrete Manhole Standard Drawing RD730 SI.

No addition in concrete quantities shall be made for shaping floor of inlet.

No reduction in pay length of curb, gutter, or curb & gutter will be made through the inlet area.

All exposed structural steel shall be painted with a coat of inorganic zinc primer and then with a topcoat or a field coat of organic zinc, each coat to be 0.075 mm to 0.1 mm.

All structural steel shall comply with ASTM A-36M, A-242M, or A-441M.

All castings shall be gray iron and shall comply with the KDOT Standard Specification.

The mass of castings includes no allowance for fillets and overruns.

Curb and Gutter sections shall be shaped as shown where required by the installation of curb inlets. This work shall be subsidiary to other bid items.

See sheet entitled "Reinforcing Steel for Inlets and Manholes" for details and quantities.

Steps shall be installed in all storm sewer inlets when specified in the plans or when "H" is equal to or greater than 1.8 m. Steps shall comply with the requirements of the KDOT Standard Specification.

For additional notes and details on Light Type Cast Iron Manhole Cover and Ring Type C, and Cast Iron Steps, see Standard Drawing RD730 SI "Reinforced Concrete Manhole".

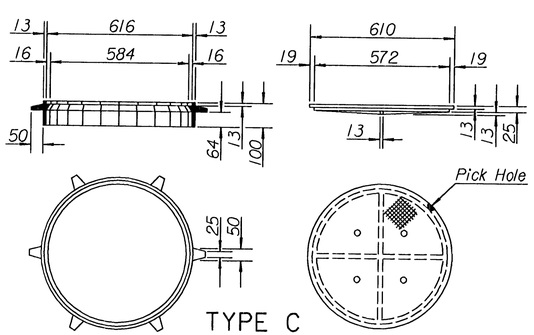


TYPE C

CAST IRON MANHOLE RING

Mass = 24 kg

CAST IRON MANHOLE COVER

Mass = 29 kg

LIGHT TYPE MANHOLE COVER & RING

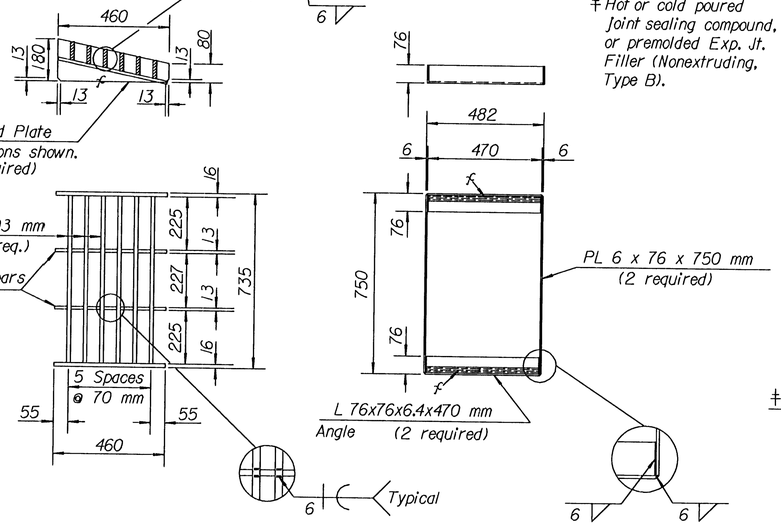


GRATE AND FRAME

Welded Structural Steel Grate & Frame
Mass = 68 kg Each (With Cross-bars)

Note: To prevent grate from rocking on bearing angles, machine finish surfaces indicated thus: "℄".

⚠ On all interstate projects and rural area projects, the two 13 mm ϕ x 460 mm bars are to be omitted. The mass of the grate and frame without these bars is 67 kg of structural steel.

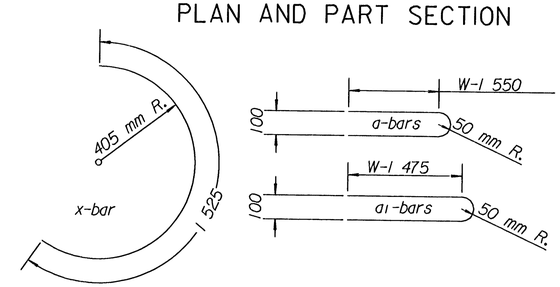


BENDING DIAGRAMS

All dimensions are out to out.

| NO. | DATE | REVISIONS | BY | APP'D |
|---|---|---|---|---|
| 3 | 12-15-97 | Revised step spacing | R.J.S. | J.O.B. |
| 2 | 5-19-97 | Changed Std. Drawing No. reference | R.J.S. | J.O.B. |
| 1 | 1-27-97 | Revised Rebar Designation | R.J.S. | J.O.B. |

KANSAS DEPARTMENT OF TRANSPORTATION

TYPE 12

CURB INLET

RD746 SI

| | | | |
|---|---|---|---|
| FHWA APPROVAL 2-2-98 | | APP'D. James O. Brewer | |
| DESIGNED | DETAILED R.J.S. | QUANTITIES R.J.S. | TRACED M.S.T. |
| DESIGN CK. | DETAIL CK. W.L.H. | QUAN.CK. | TRACE CK. R.J.S. |

Drawn By : $$USERNAME$$ Plotted : $$$$$$$$TIME$$$$$$$$
File : $$$$$$$$$$$$$$$$$$CONSPEC$$$$$$$$$$$$$$$$$$