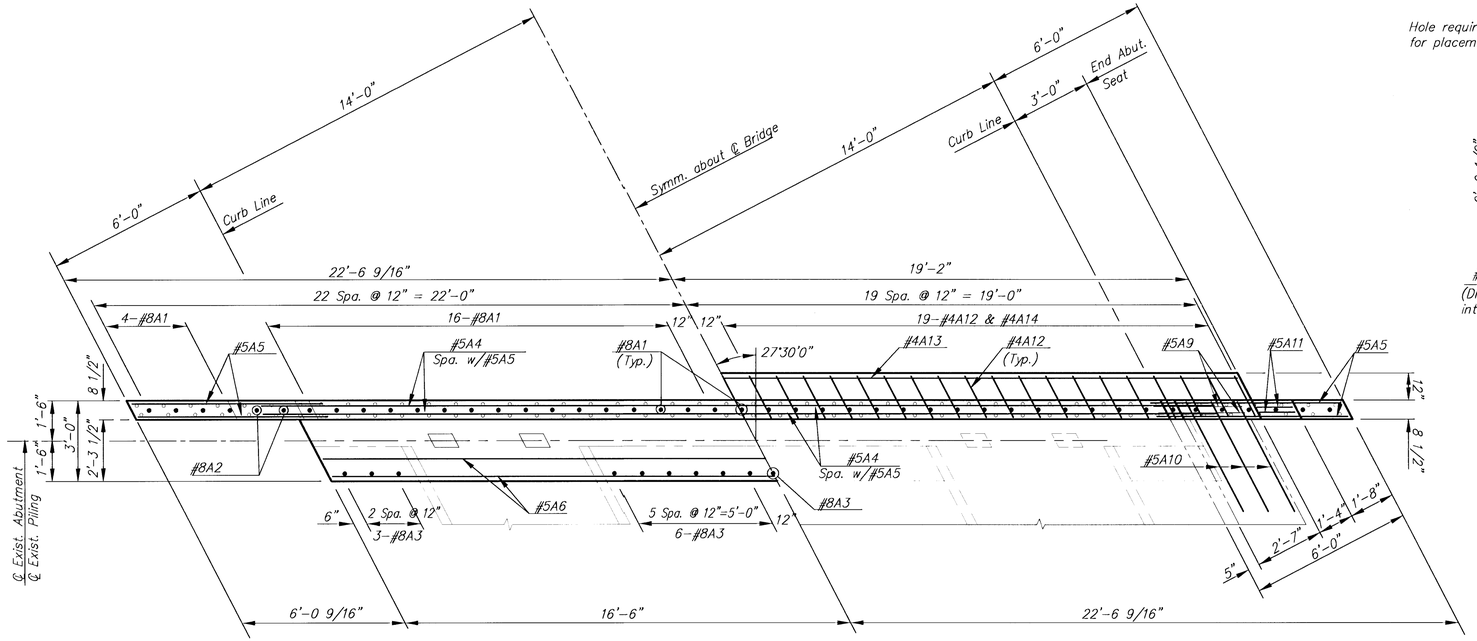

REINFORCING STEEL IN BOTTOM OF ABUTMENT

REINFORCING STEEL IN TOP OF ABUTMENT

PLAN

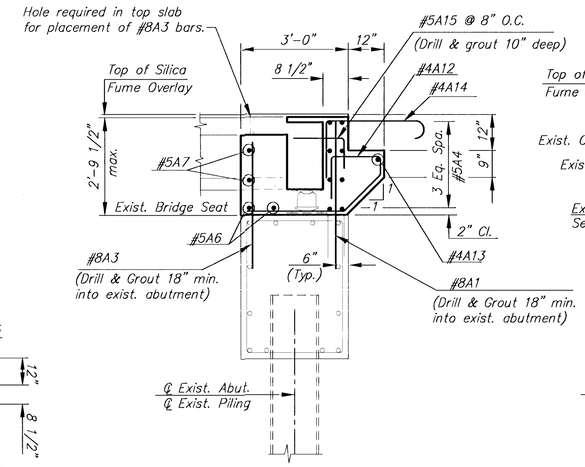

SECTION A-A

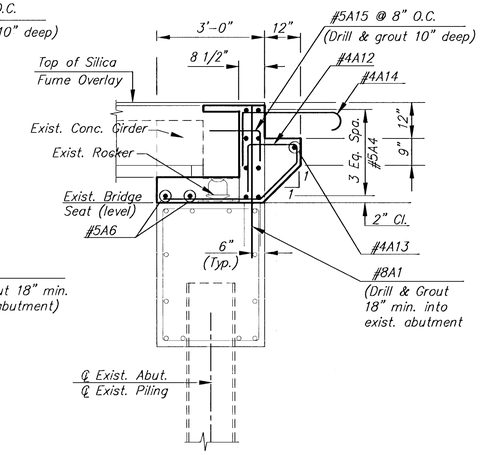

SECTION B-B

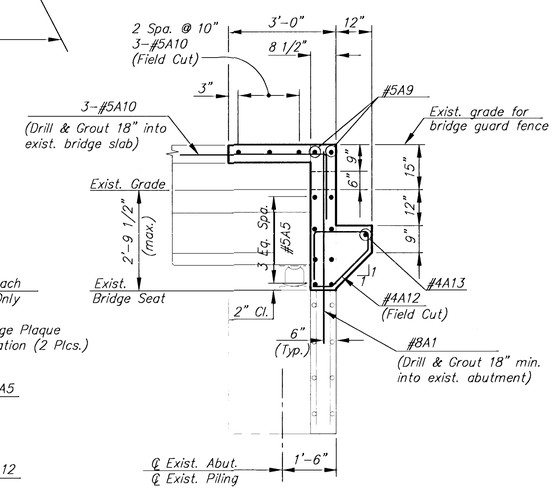

SECTION C-C

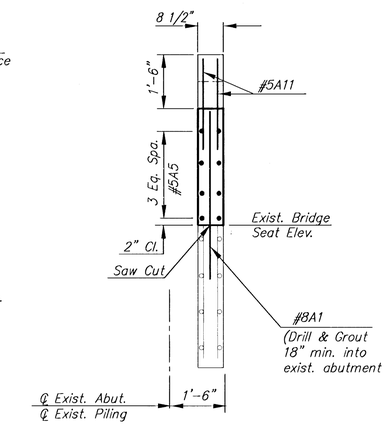

SECTION D-D

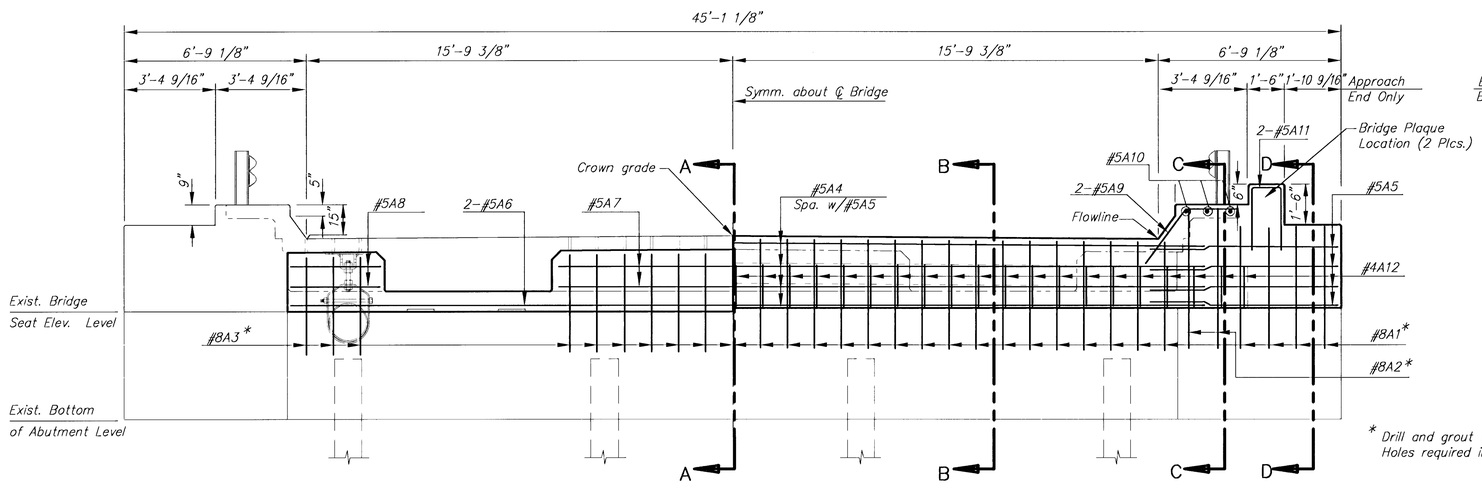

REINFORCING STEEL IN FAR FACE OF ABUTMENT

REINFORCING STEEL IN NEAR FACE OF ABUTMENT

ELEVATION

* Drill and grout 18" min. into existing abutment.
Holes required in top slab for placement of #8A1 bars.

MID-KANSAS ENGINEERING CONSULTANTS, INC.
411 N. WEBB ROAD
WICHITA, KS. 67206
316-684-9600

37TH STREET NORTH BRIDGE
PROJECT NAME

ABUTMENT REHABILITATION DETAILS
SHEET TITLE

KJS	DPG	
DESIGN BY:	DRAWN BY:	CHECKED BY:
APRIL 1998	96085	10 / 23
DATE	JOB NO.	SHEET/OF

G:\CIVIL\96085\DETAILS\96085AB Tue May 12 13:37:00 1998 PLOTTED BY DPG