FHWA REGION NO.	STATE	PROJECT NO.	YEAR	SHEET NO.	TOTAL SHEETS
7	KANSAS	618-34	1998	77	100

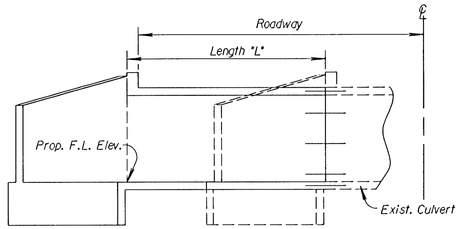

TYPICAL SECTION
(Flared Wings)

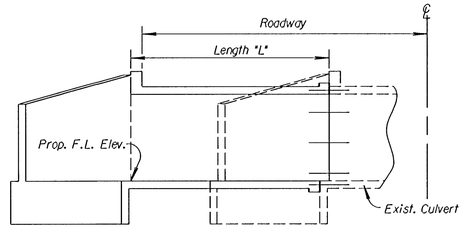

TYPICAL SECTION
(Skewed Structure)

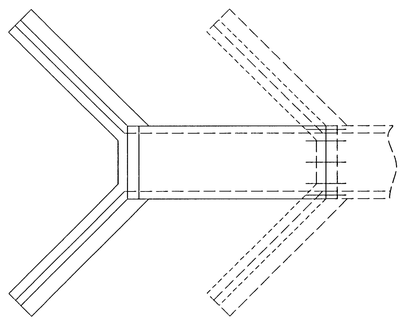

TYPICAL PLAN
(Flared Wings)

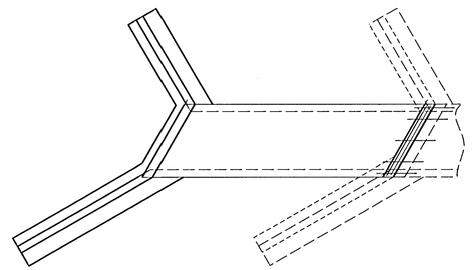

TYPICAL PLAN
(Skewed Structure)

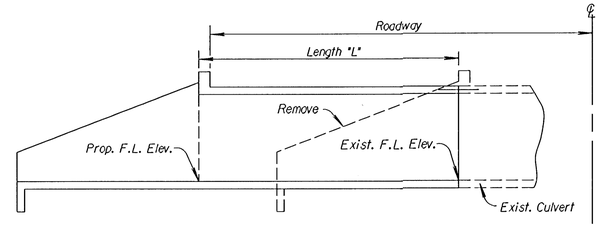

TYPICAL SECTION
(Straight Wings)

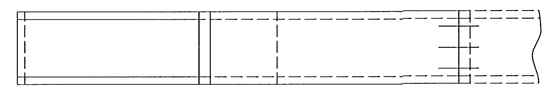

TYPICAL PLAN
(Straight Wings)

GENERAL NOTE

Dimensions of existing structures shall be checked in the field prior to starting the new construction. Interior walls of multiple box extensions need not be the same thickness as the existing walls.

All existing concrete surfaces adjacent to new concrete shall be thoroughly cleaned by brushing, and soaked with water immediately prior to placing the new concrete.

All work and material necessary for installing the dowel bars shall be subsidiary to the bid item "Reinforcing Steel".

Grouting of bars shall meet the Standard Specifications of the Kansas Department of Transportation.

"s_1" and "f_1" bars shall be placed at ½ normal spacing for the first 18".

Straight Wing Extensions

Remove existing wings and wing aprons. Remove top of hubguard if necessary to clear new construction. A minimum of 24" length of the existing wing and floor steel shall be left intact and shall be cleaned and straightened to bond into the new concrete. Dowels (#5 deformed bars) shall be inserted across the top of box as shown in sketch. Butt extensions against existing culvert.

Flared Wing Extensions

Remove top of hubguard, if necessary, to clear new construction. Dowels (#5 deformed bars) shall be inserted in top, bottom, sides and intermediate walls, as shown in sketch. Butt extensions against existing culvert.

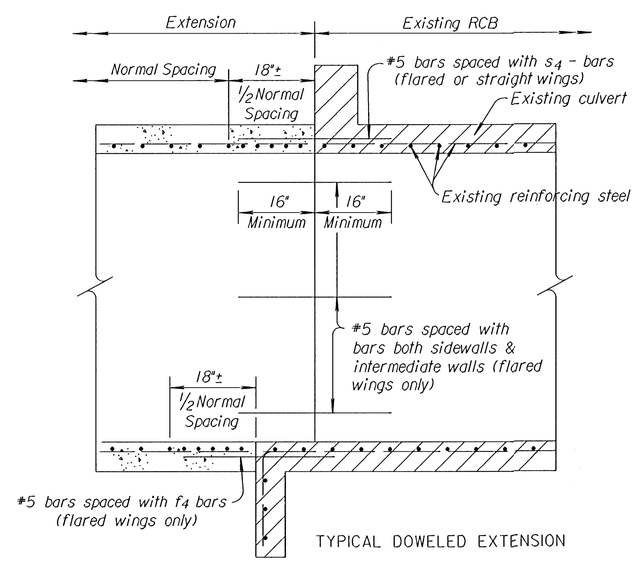

TYPICAL DOWELED EXTENSION

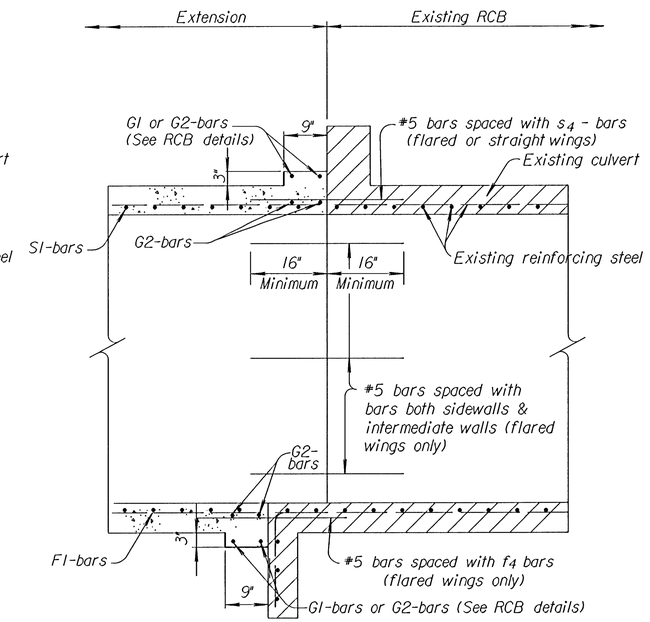

TYPICAL DOWELED EXTENSION
(Skewed Structure)

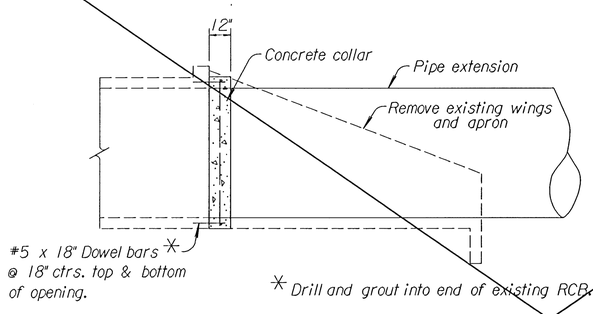

SIDE VIEW

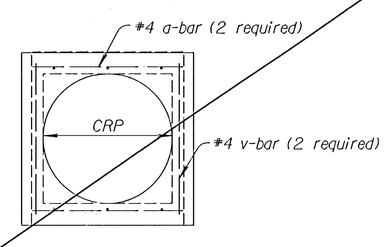

END VIEW

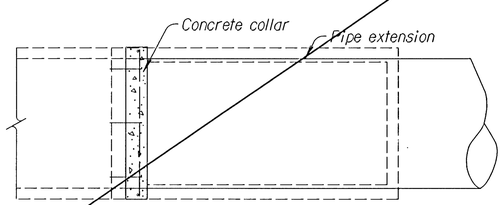

TOP VIEW

CONSTRUCTION OF COLLAR

NOTE: All Labor, Equipment, Materials, and Incidentials necessary to complete the concrete collar shall not be paid for directly but shall be considered Subsidiary to the individual pipe bid item.

Station	Size Exist. R.C.B.	Size C.R.P. Extension	Ext. Length		End Section	
			Lt.	Rt.	Lt.	Rt.

Quantities on this sheet are included in Summary of Quantities, Sh. No.

Station	Size Exist. R.C.B.	Roadway		Length "L"		Class AAA Conc. Cu. Yds.	Reinf. Steel Lbs.	Remarks
		Lt.	Rt.	Lt.	Rt.			

NO.	DATE	REVISIONS	BY	APP'D
4	12-28-93	Add collar construction note	R.J.S.	J.O.B.
3	12-21-92	Rev. Bar Spacing on Skewed Box	R.J.S.	J.O.B.
2	6-9-92	Added Skewed Box Details	R.J.S.	J.O.B.
1	5-13-91	Revised General Note	R.J.S.	J.O.B.

KANSAS DEPARTMENT OF TRANSPORTATION

TYPICAL CULVERT EXTENSIONS

RD080

FHWA APPROVAL	2-10-94	APP'D James O. Brewer	
DESIGNED	DETAILED	QUANTITIES	TRACED Bowser
DESIGN CK.	DETAIL CK.	QUAN.CK.	TRACE CK. Seitz

Drawn By : KDOT | Plotted : DJW 8-5-97
File : i:/1995/95297/002/standard/rd080.dgn