FHWA REGION NO.	STATE	PROJECT NO.	YEAR	SHEET NO.	TOTAL SHEETS
7	KANSAS	87-N-0099-01	1999	28	68

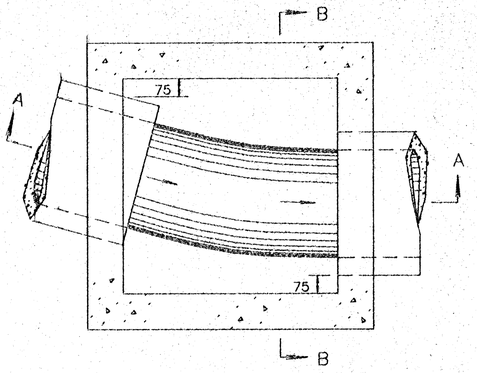

PLAN – FLOOR (Example I)

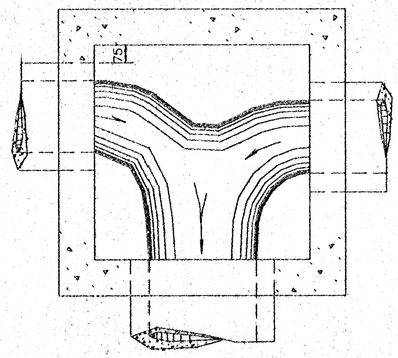

PLAN – FLOOR (Example III)

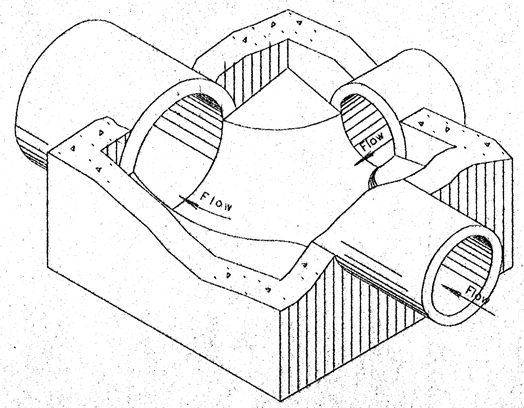

Floor of manhole shall be shaped as shown in the examples to increase hydraulic efficiency.

ISOMETRIC VIEW (Example IV)

GENERAL NOTES

Use Class A Concrete throughout. All exposed edges shall be finished with an edging tool.

At the contractors option Class A Concrete (AE) or mix used in concrete pavement may be used throughout.

In general, pipes will enter and leave manhole at various positions. Where possible bend bars around pipes.

Floor of manhole shall be shaped as shown in various "EXAMPLES" with unreinforced Class "A" Concrete.

Manhole opening and steps, where used, shall be placed to afford easy access to top of shaped invert. Top reinforcing bars shall be adjusted accordingly.

All castings shall be gray iron and shall comply with the KDOT Standard Specifications.

No deductions in concrete quantities shall be made for pipe openings or additions to concrete quantities shall be made for shaping floor of manholes.

The top of the manhole shall be sloped slightly to approximately fit the ground line or other condition as directed by the Engineer.

Dimensions and masses of cast iron as shown on this sheet are minimum. Larger dimensions and/or heavier masses of cast iron may be used.

The Contractor has the option of using precast manholes, as approved by the Engineer.

Steps shall be installed in all manholes when specified in the plans or when "H" is equal to or greater than 1 800 mm. Steps shall comply with the requirements of the KDOT Standard Specification.

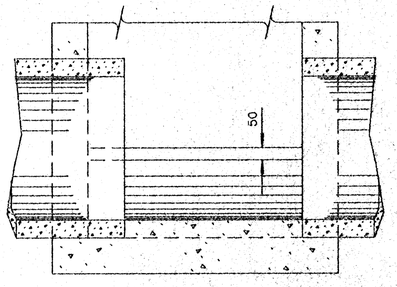

SECTION A–A (Example I)

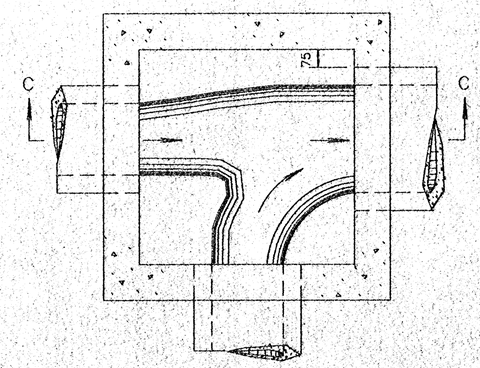

PLAN – FLOOR (Example IV)

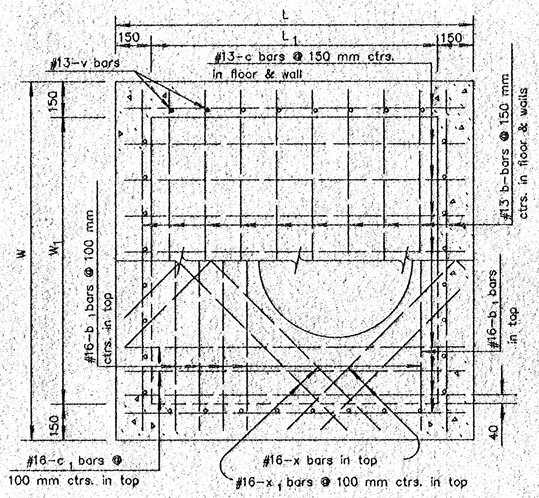

PLAN (Showing top & floor reinf.)

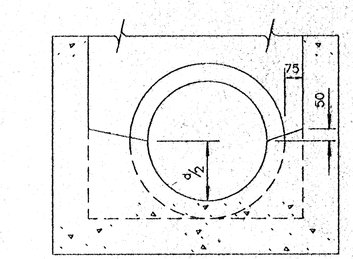

SECTION B–B (Example I)

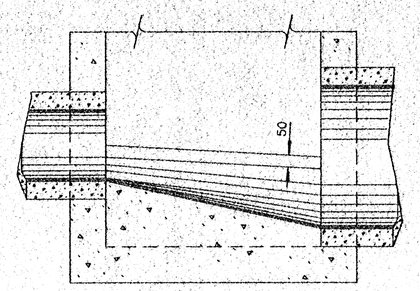

SECTION C–C (Example IV)

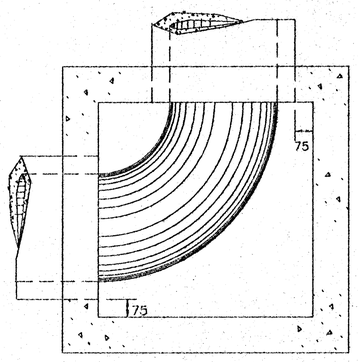

PLAN – FLOOR (Example II)

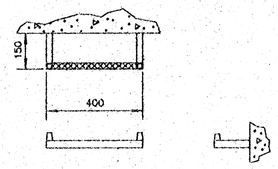

STEP DETAILS

? Steps shall be uniformly spaced. Spacing shall be 300 mm minimum and 420 mm maximum.

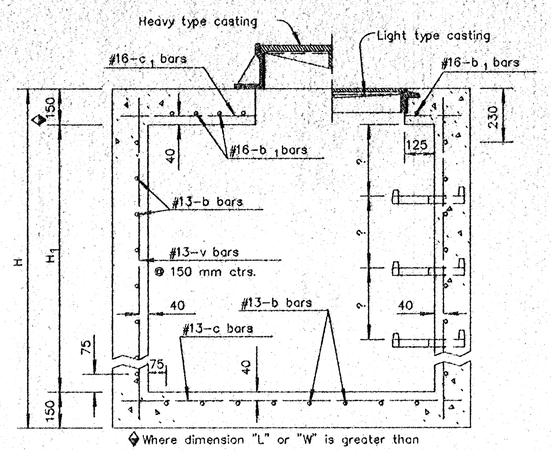

◆ Where dimension "L" or "W" is greater than 1 800 mm use 200 mm slab thickness.

SECTION (Exclusive of floor shaping)

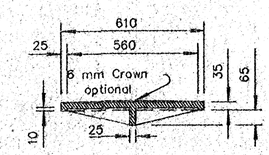

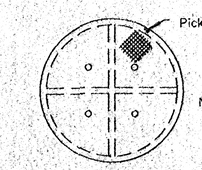

NOTE: All manhole castings are cast iron. mass of castings includes no allowance for fillets and overruns.

MANHOLE COVER TYPE A & B

(Mass=61 kg; without 6 mm Crown= 57 kg)

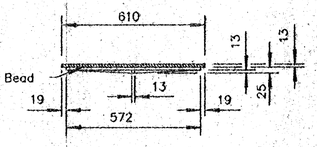

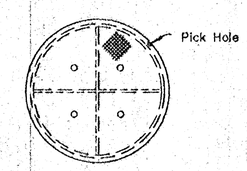

MANHOLE COVER TYPE C

(Mass= 29 kg)

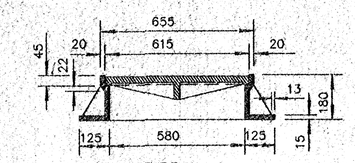

TYPE A

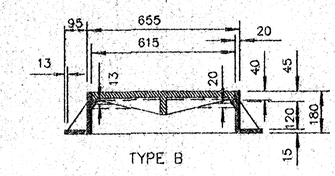

TYPE B

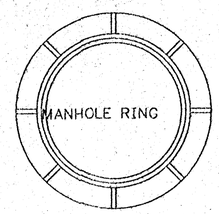

(Type A Ring= 87 kg, Type B Ring= 90 kg)

HEAVY TYPE

MANHOLE COVER AND RING

Note: Either Type A or Type B may be used.

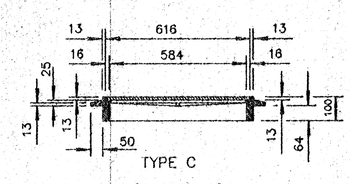

TYPE C

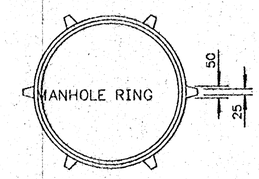

(Mass= 24 kg)

*LIGHT TYPE

MANHOLE COVER & RING

*Rings with four equally spaced lugs will be permitted.

NO.	DATE	REVISIONS	BY	APP'D.
3	12-16-97	Revised step spacing	R.J.S.	J.G.B.
2	9-15-97	Revised v.b. & c bar spacing	R.J.S.	J.G.B.
1	1-27-97	Revised Rebar Designation	R.J.S.	J.G.B.

KANSAS DEPARTMENT OF TRANSPORTATION

REINFORCED CONCRETE MANHOLE

RD730 SI

FHWA APPROVAL	2-2-98	APP'D. James G. Brewer			
DESIGNED	DETAILED	QUANTITIES	TRACED	Bossie	
DESIGN CK.	DETAIL CK.	QUAN.CK.	TRACE CK.	Sells	

Drawn By$$USERNAME$$Plotted$$$$SYTIME$$$$$$
File $$$$$$$$$$$$$$$$$$DGNSPEC$$$$$$$$$$$$$$$$$$