FHWA REGION NO.	STATE	PROJECT NO.	FISCAL YEAR	SHEET NO.	TOTAL SHEETS
7	KANSAS	87TE-0040-01	1997	22	33

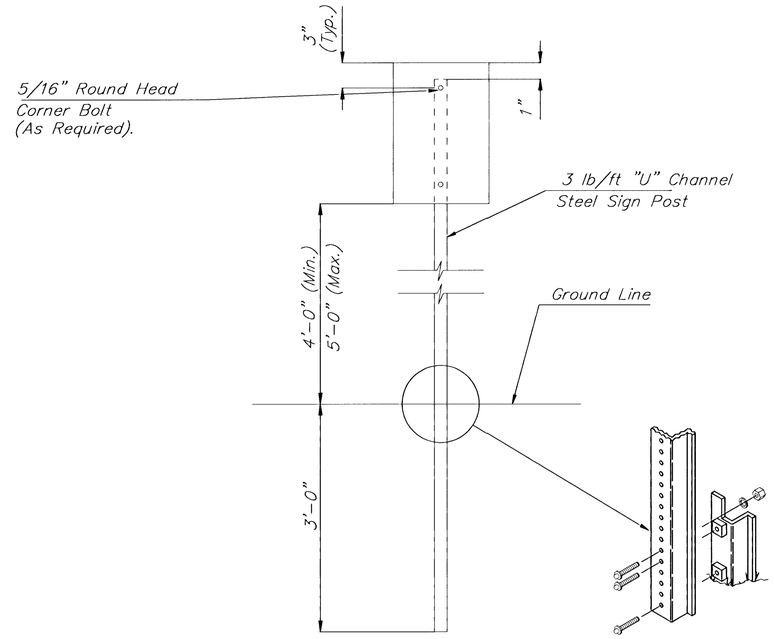

TYPICAL SIGN MOUNTING INSTALLATION

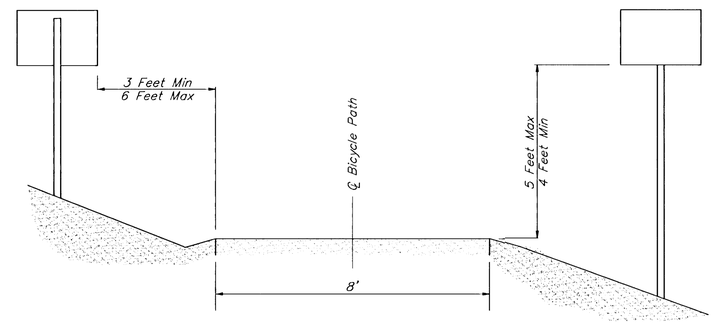

SIGN PLACEMENT ON PATH

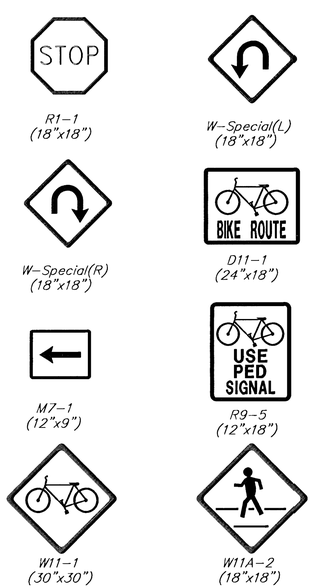

SIGN ASSEMBLY QUANTITIES

Note: Table is for Information Only. Items Shall be Paid as Lump Sum "Project Signage."

STATION	OFFSET	SIGN	QUANTITY
6+12	4' Rt.	D11-1	1
6+12	4' Rt.	M7-1	1
7+48	10' Rt.	W-Special(L)	1
9+35	10' Lt.	W-Special(R)	1
78+22	211' Lt.	W11-1	1
78+77	295' Rt.	W11-1	1
78+95	59.5' Rt.	R1-1	1
99+73	15' Lt.	W11A-2	1
99+80	203.5' Lt.	W11-1	1
100+24	10' Rt.	W11A-2	1
105+76	4' Rt.	R9-5	1
107+91	4.8' Lt.	R9-5	1
111+42	56.3' Rt.	OBR1-1-24	1
112+19	59.8' Rt.	OBR1-1-24	1
131+00	95' Lt.	W11-1	1
TOTAL			15

MULTI-USE PATHS

Multi-Use paths should be signed with appropriate regulatory, warning and destination signs.

a. Regulatory Signs

Regulatory signs inform users of traffic laws or regulations. They are erected at the point where regulations apply. Common regulatory signs are:

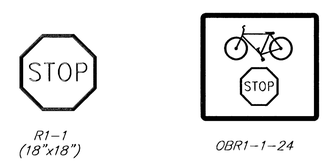

Note: Sign R1-1 is a reduced version of a standard motor vehicle sign. It should be used where it will be visible only to bicyclists, for example, where a path crosses another path or where a path intersects a roadway at right angles. Sign OBR1-1 should be used where the sign will be visible to motor vehicle traffic, for example, where a path is parallel and close to a roadway.

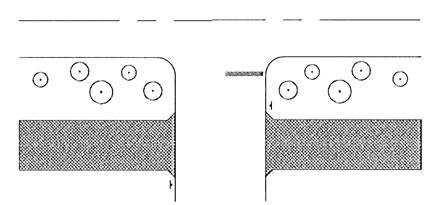

Figure 73: Appropriate use of sign OBR1-1

GENERAL NOTES - SIGNING

NOTE: References below to "standard specifications" denote "standard specifications for state road and bridge construction, edition 1990" by the Kansas Department of Transportation.

1. Post Anchors. Posts shall be anchored with a yielding base post support as detailed.

2. Posts for traffic control signs. Posts shall conform to the requirements of subsection 1620 of the standard specifications except that all posts shall weigh 3 lbs./foot minimum.

3. Posts for street name signs (SNS). Posts shall be 9 feet long, constructed from 2 3/8" O.D. galvanized steel pipe weighing a minimum of 3.65 lbs./foot. Posts shall be positioned so that the bottom blade is 7 feet above grade.

4. Sign blanks for traffic control signs. Sign blanks shall be fabricated from 0.080" aluminum alloy 6063-T6 conforming to the requirements of subsection 1626 of the standard specifications.

5. Signs blades for street name signs. Extruded aluminum blades shall be aluminum alloy conforming to 6063-T6 or 5052-H38 (ASTM specifications B221, latest issue). Blades shall have an alodine or phosphate etched finish. Blades shall have square corners and no holes.

   Blades bearing the street names shall be firmly attached to the mounting brackets using allen-type set screws. The blades shall be oriented parallel to the street.

6. Mounting brackets for SNS. Die-cast aluminum brackets shall be aluminum alloy 360 having a tensile strength of 44,000 PSI. The brackets shall be smoothly finished free of pits, burrs, and flaws. Each bracket shall be tapped and drilled for 5/16" zinc-plated allen-type set screws having self locking saw-tooth ends.

7. Fasteners. All steel fasteners for traffic control signs shall be galvanized and shall conform to the requirements of subsection 1614 of the standard specifications.

8. Reflective sheeting. Reflective sheeting shall be type II - High performance class HA in accordance with subsection 2201 of the standard specifications.

9. Process ink. All process ink shall conform to the requirements of subsection 2202 of the standard specifications.

10. Details. Regulatory and warning signs shall conform to the details in "Standard Highway Signs", FHWA 1979.

11. Details - SNS. The reflective sheeting for the 6 3/4" standard size SNS is to be the highway green reverse screened background with silver-white #2 copy with 4" uppercase and 3" lower case primary copy and suffix copy. Both series "C". Where suffix letters are used on numbered streetes such as RD, TH, etc., they shall be 1 1/2" lower case series "C" letters. Faces to trim to a 6 1/4" (See detail A).

    The reflective sheeting for the 9" metro size SNS is to be the highway green reverse screened background with silver-white #2 copy with 5" upper case and 3 3/4" lower case primary copy and suffix copy, both series "C". Where suffix letters are used on numbered streets, such as RD, TH, etc., they shall be 3" lower case series "C". The cardinal direction centered directly below the block number shall be an upper case, 3" series "C" letter. Faces to trim to an 8 1/2" width (See detail B).

    For cul-de-sac streets, a 9" metro size blade shall be used with the house numbers displayed beneath the street name. Lettering to be the same as for the 6 3/4" size blade, except that the house number information shall be 3" series "C".

    Shop drawings of layout for SNS shall be submitted to the Traffic of Engineering Division of the City of Wichita for approval prior to fabrication. The finished signs as supplied shall be of good appearance, free from ragged edges, cracks, scales or blisters, and shall be clean cut. Signs shall be packed in such a manner as to prevent damage or defacement during shipment or storage.

12. New traffic control and street name signs. New traffic control and street name signs shall be measured and paid for at the lump sum price for signing. The payment as set forth above shall be considered full compensation for all excavation, backfilling, posts, anchors, fasteners, materials, labor, tools, and incidentals necessary to complete this work.

Revised 5/8/97 DMV

GYPSUM CREEK BICYCLE PATH
PERMANENT SIGNING

BAUGHMAN COMPANY P. A.
ENGINEERING & SURVEYING
316/262-7271 • 315 ELLIS • WICHITA, KANSAS 67211

PROJECT NUMBER	SHEET
472-82573	22 OF 33

DESIGN	DRAWN	UTIL. CHECK'D	DATE	SCALE
	KF		5-2-94	None

93-10-E630
OTP/SDWGET