FHWA REGION NO.	STATE	PROJECT NO.	YEAR	SHEET NO.	TOTAL SHEETS
7	KANSAS	472-83084	2000	29	58

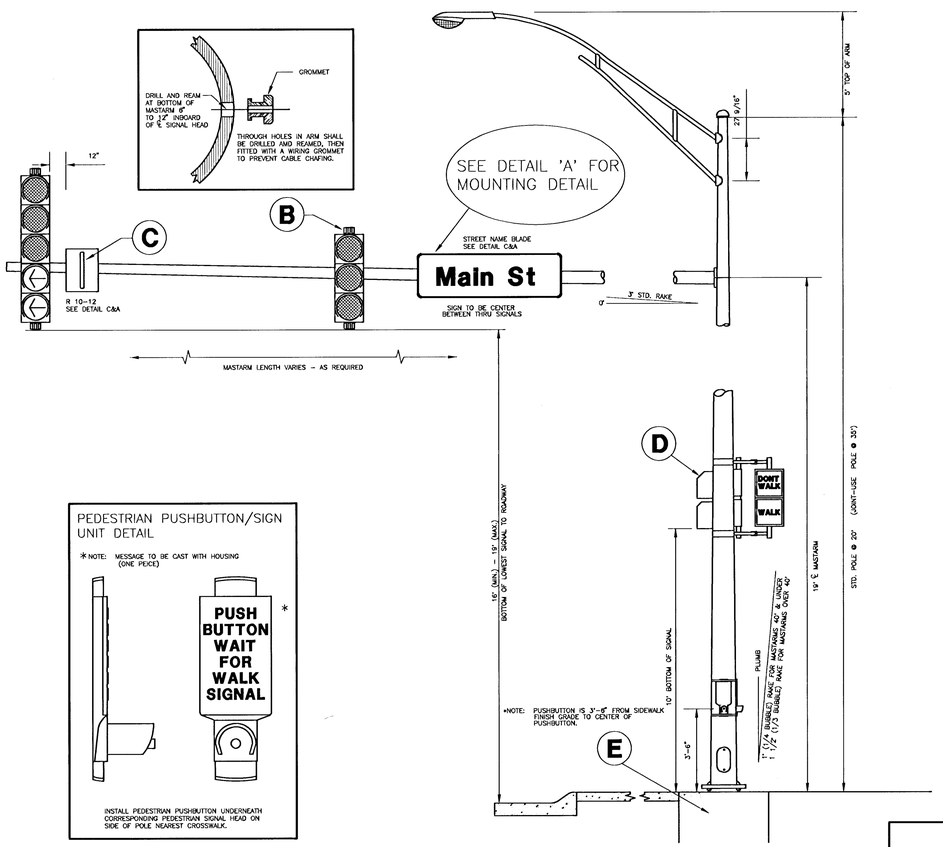

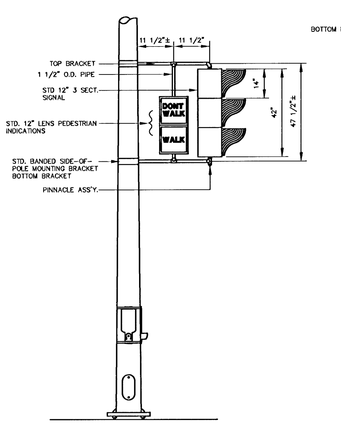

ASSEMBLY G
12" PEDESTRIAN INDICATIONS

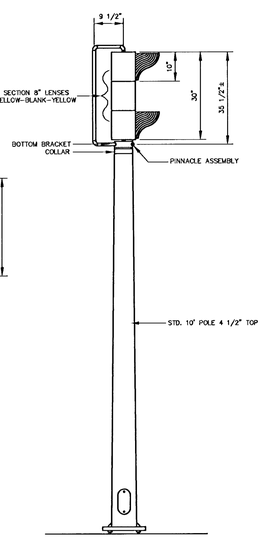

ASSEMBLY H
ADVANCE WARNING FLASHER

BANDED SIGN MOUNTING BRACKET DETAIL

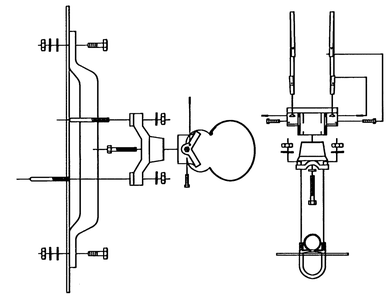

A

TYPE I SIGNAL MOUNTING BRACKET ASSEMBLY DETAIL

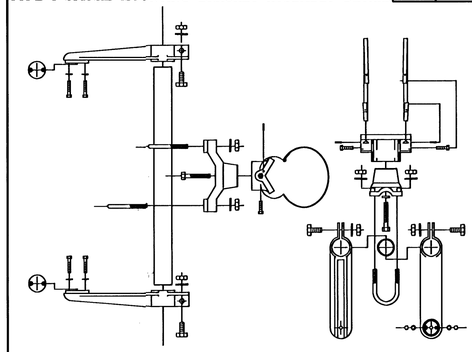

B

STANDARD SIGNING

R 10-12
24" x 30"

SEE DETAIL "A" FOR MOUNTING HARDWARE

60" x 18"

SEE DETAIL "A" FOR MOUNTING HARDWARE USE 2 PER SIGN

C

TYPE III SIDE-OF-POLE MOUNTING BRACKET ASSEMBLY

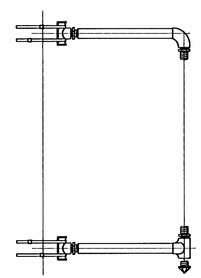

F

TYPE IV 12" PEDESTRIAN INDICATIONS

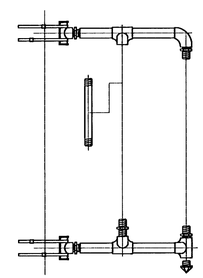

G

TYPE V ADVANCE WARNING FLASHER

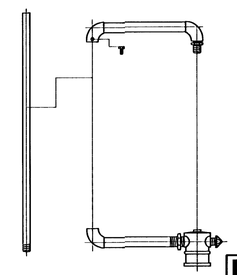

H

TYPE II SIGNAL MOUNTING BRACKET ASSEMBLY (SIDE-OF-POLE)

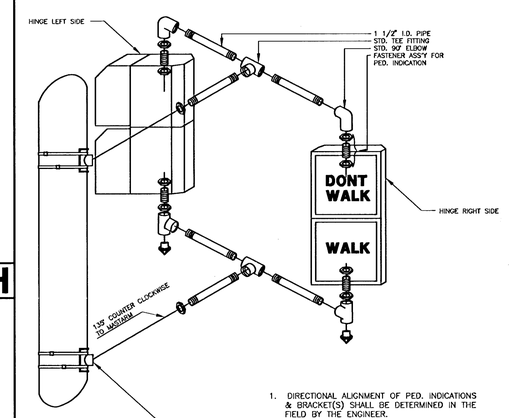

1. DIRECTIONAL ALIGNMENT OF PED. INDICATIONS & BRACKET(S) SHALL BE DETERMINED IN THE FIELD BY THE ENGINEER.
2. THROUGH HOLES IN THE POLE SHALL BE DRILLED AND WELL REAMED TO PREVENT CABLE CHAFING.
3. HINGE PEDESTRIAN SIGNAL DOORS AWAY FROM POLE.

D

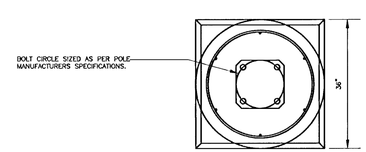

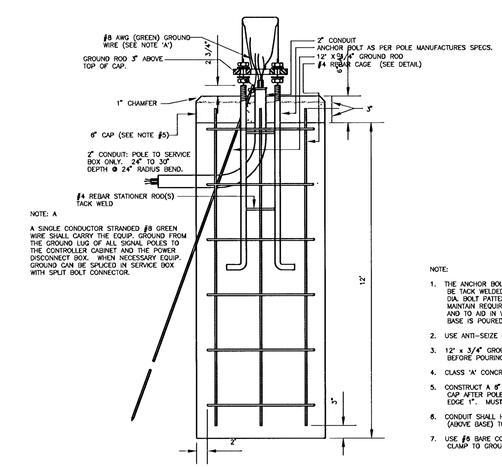

NOTE: A

A SINGLE CONDUCTOR STRANDED #8 GREEN WIRE SHALL CARRY THE EQUIP. GROUND FROM THE GROUND LUG OF ALL SIGNAL POLES TO THE CONTROLLER CABINET AND THE POWER DISCONNECT BOX. WHEN NECESSARY EQUIP. GROUND CAN BE SPLICED IN SERVICE DOX WITH SPLIT BOLT CONNECTOR.

NOTE:

1. THE ANCHOR BOLTS FOR THE SIGNAL POLE SHALL BE TACK WELDED TOGETHER IN A 18" OR 20" DIA. BOLT PATTERN (ON CENTERS AS SHOWN) TO MAINTAIN REQUIRED BOLT CONFIGURATION PATTERN AND TO AID IN VERTICAL POSITIONING WHILE CONCRETE BASE IS POURED.
2. USE ANTI-SEIZE COMPOUND ON ALL THREADS.
3. 12' x 3/4" GROUND ROD TO BE POSITIONED BEFORE POURING BASE.
4. CLASS 'A' CONCRETE SHALL BE USED TO CONSTRUCT BASE.
5. CONSTRUCT A 8" THICK x 36" SQUARE CONCRETE CAP AFTER POLE HAS BEEN ERECTED & PLUMBED. CHAMFER EDGE 1". MUST BE APPROVED BY ENG. BEFORE POURED.
6. CONDUIT SHALL HAVE PLASTIC (OR METAL) BUSHING (ABOVE BASE) TO PREVENT CABLE CHAFING.
7. USE #6 BARE COPPER GROUND CONDUCTOR FROM CLAMP TO GROUND BOLT IN ACCESS HOLE.

REBAR CAGE

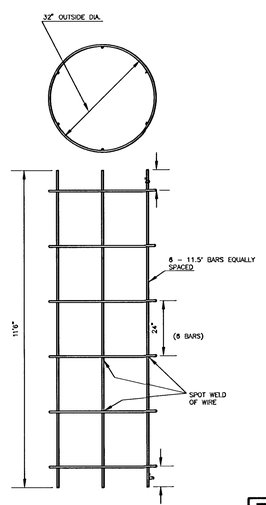

E

PROJECT DESCRIPTION

STEEL SIGNAL POLE ASSEMBLY DETAILS

PROJECT NUMBER

DRAWN BY: T.M.	APPROVED BY	REVISED BY: T.M.
DATE: FEB. 96		DATE: JAN. 97

CITY OF WICHITA
DEPARTMENT OF PUBLIC WORKS

DIVISION OF TRAFFIC ENGINEERING	SCALE
WM. G. McKINLEY P.E. TRAFFIC ENGINEER	NO SCALE

H:\CIVIL\SENECA\94005-2\SIGNAL\SSP-DTL.DWG Mon May 01 16:32:44 2000