FHWA REG NO.	STATE	PROJECT NO.	YEAR	SHEET NO.	SHEETS
7	KANSAS	472-83084	2000	38	58

TRAFFIC CONTROL SIGNS & SIGN POST

Station	Location from ℄	R2-1	R3-9B	R7-107L	R7-107R	S1-1	SNS ✳	Sign Post Length: Breakaway 1-3/4"x1-3/4"	Sign Post Length: "U"-Channel
Seneca									
25+01	Rt.				1				8.0
27+50	Lt.					1			
30+07	Lt.				1				8.0
30+31	Lt.					1			
31+28	Rt.					1			
32+11	Rt.	1						9.5	
32+70	Lt.		1					9.5	
33+00	Rt.		1					9.5	
33+11	Lt.					1			
34+71	Lt.	1						9.5	
35+62	Rt.					1		9.5	
35+91	Lt.					1			
36+36	Rt.			1					8.0
37+53	Rt.					1			
40+61	Lt.					1			
41+84	Lt.					1		9.5	
42+84	Rt.				1				8.0
43+94	Lt.					1			
44+55	Rt.					1			
45+25	Rt.		1					9.5	
45+50	Lt.		1					9.5	
46+23	Lt.				1				8.0
47+34	Lt.					1			
49+03	Lt.	1						9.5	
50+23	Lt.					1			
51+51	Rt.					1		9.5	
51+89	Rt.			1					8.0
52+06	Lt.				1				8.0
52+26	Rt.					1			
53+10	Lt.					1			
56+60	Lt.					1			
57+00	Lt.					1		9.5	
58+15	Lt.		1					9.5	
Total		3	5	2	5	4	14	114.0	56.0

✳ SNS: Street Name Sign See Typical Mounting Installation Detail

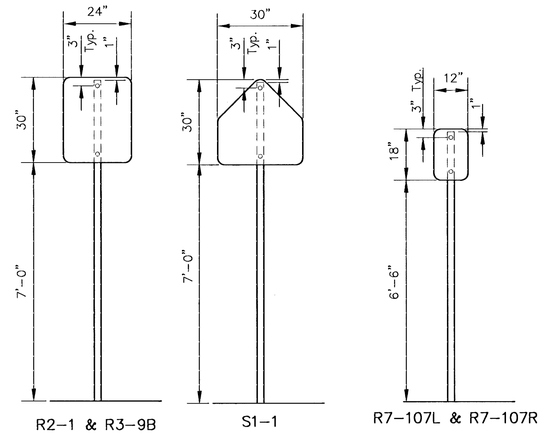

R2-1 & R3-9B S1-1 R7-107L & R7-107R

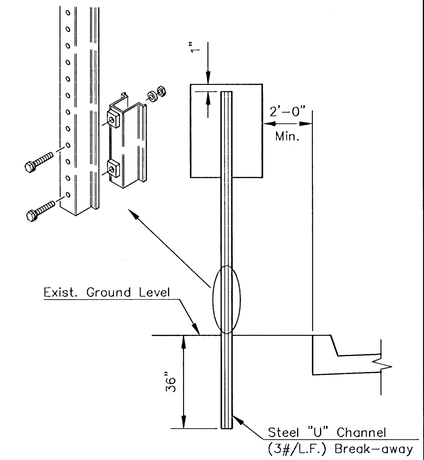

TRAFFIC SIGN INSTALLATION DETAIL

FOR SIGNS NOT GREATER THAN 12" WIDE

SIGN POST LENGTH SUMMARY ✳

BREAKAWAY SIGN POST: 1 3/4"x1 3/4"x LENGTH	EACH
9-1/2'	12
2-1/4"x2-1/4"x18"	12
2"x2"x36"	12

U-CHANNEL LENGTH	EACH
STUBS 3'	7
POSTS 8'	7
POSTS 9'	
POSTS 9-1/2'	
POSTS 11'	

✳ For Information Only

SIGN MOUNTING DETAILS

RECAPITULATION OF MATERIALS ✳

ITEMS	TOTAL	UNIT
Sign Face, (High Intensity HA Reflective Sheeting)	63.0	S.F.
Steel "U" Channel Sign Post	77.0	L.F.
Breakaway Sign Post, 1-3/4" x 1-3/4"	114.0	L.F.
Breakaway Anchor Sleeve, 2-1/4" x 2-1/4" x 18"	18.0'	L.F.
Breakaway Sign Post Anchor, 2" x 2" x 36"	36.0	L.F.
Street Name Sign Assembly (Per Typical Installation Detail)	14	EACH

RECAPITULATION OF MATERIALS

BID ITEMS	TOTAL	UNIT
Signing	LUMP SUM	L.S.

SIGN DESCRIPTION

CLASSIFICATION	TYPE	SIZE	AREA
R2-1	SPEED LIMIT	24"x30"	5.00 SQ. FT.
R3-9B	CENTER LANE LEFT TURN ONLY	24"x30"	5.00 SQ. FT.
S1-1	DESIGNATES SCHOOL	30"x30"	6.25 SQ. FT.
R7-107L	NO PARKING BUS STOP ◄—	12"x18"	1.50 SQ. FT.
R7-107R	NO PARKING BUS STOP —►	12"x18"	1.50 SQ. FT.

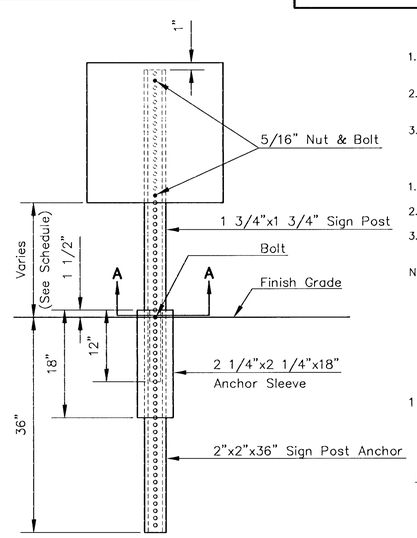

BREAK-AWAY SIGN POST DETAIL

PAVEMENT INSTALLATION SEQUENCE

1. SIGN POST ANCHOR DRIVEN INTO SUBGRADE PRIOR TO THE PLACEMENT OF THE PAVEMENT.
2. ANCHOR SLEEVE DRIVEN INTO SUBGRADE OVER THE SIGN POST ANCHOR PRIOR TO THE PLACEMENT OF THE PAVEMENT.
3. INSERT SIGN POST INTO THE SIGN POST ANCHOR AND BOLT IN PLACE.

GROUND INSTALLATION SEQUENCE

1. SIGN POST ANCHOR DRIVEN INTO THE GROUND.
2. ANCHOR SLEEVE DRIVEN INTO THE GROUND OVER THE SIGN POST ANCHOR.
3. INSERT SIGN POST INTO THE SIGN POST ANCHOR AND BOLT IN PLACE.

NOTE: IN ALL INSTALLATIONS THE FIRST HOLE ABOVE THE FINISHED GRADE LEVEL IN ALL THREE UNITS MUST BE IN LINE FOR INSERTION OF THE BOLT.

ALL BOLTS AND NUTS FOR FASTENING THE SIGNS AND SIGN POST ASSEMBLY SHALL COMPLY WITH SECTION 1614 AND ALL WASHERS SHALL COMPLY WITH SECTION 1614 OF THE STANDARD SPECIFICATION FOR STATE ROAD AND BRIDGE CONSTRUCTION (1990 EDITION) AND SHALL BE SUBSIDIARY ITEM.

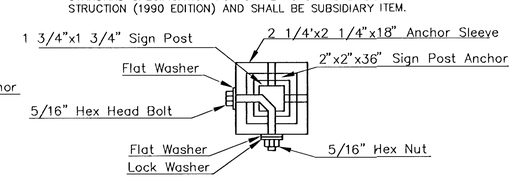

SECTION A-A

NOTE: ALL LETTER, NUMBER, & SYMBOL SIZES, SPACING, & COLORS AND THE SIGN COLORS SHALL CONFORM TO THE CURRENT "MANUAL ON UNIFORM TRAFFIC CONTROL DEVICES."

ALL SIGN MATERIAL TO BE 0.080" ALUMINUM.

WICHITA, KANSAS

SIGNING DETAILS

JOB NO. DATE: CH'KD:

SCALE: NONE DRAWN: APPVD: SH. 38 OF 58

H:\CIVIL\SENECA\94005-2\STD\SIGNDTL4.DWG Mon May 01 17:00:12 2000

I:\LIBRARY\CIVIL\PAVE\WICHITA\SIGNDTL4.DWG