NOTE: GRATES SHALL BE IMPRINTED ON THE TOP SURFACE WITH "CITY OF WICHITA" USING LETTERS AT LEAST 1" IN HEIGHT. OTHER MARKING METHODS MAY BE USED ONLY IF APPROVED BY THE ENGINEER.

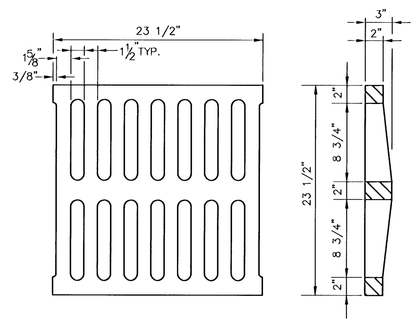

24"x24" GRATE DETAIL

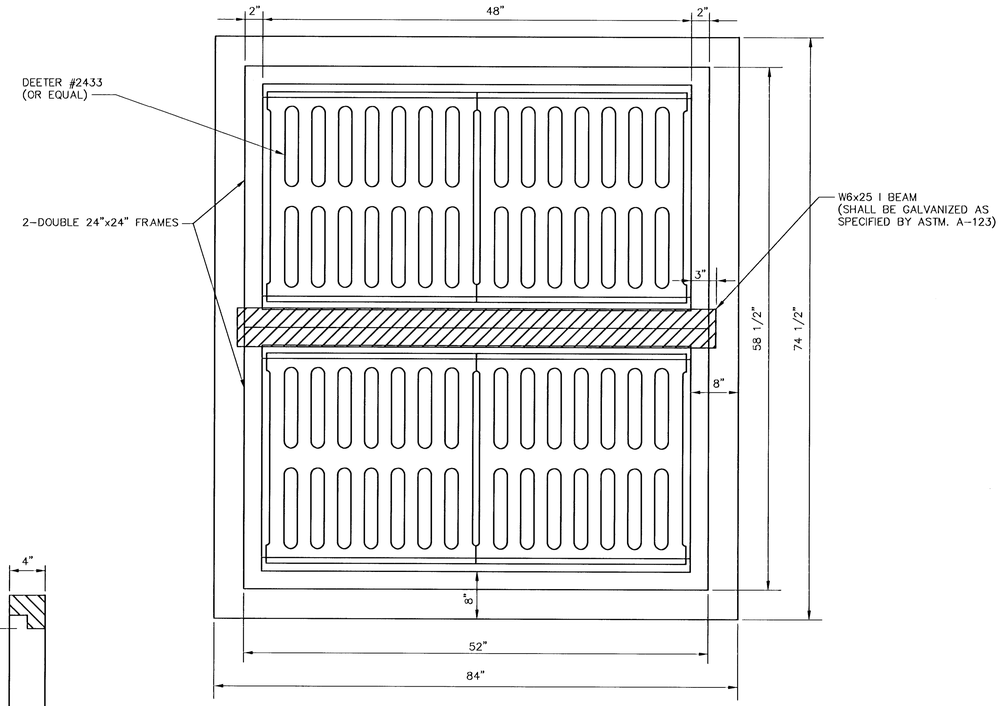

ALTERNATE 2-DOUBLE DROP INLET

(USING BEAM INSTEAD OF 2 COMMON WALLS)
(REQUIRES FOUR GRATES)

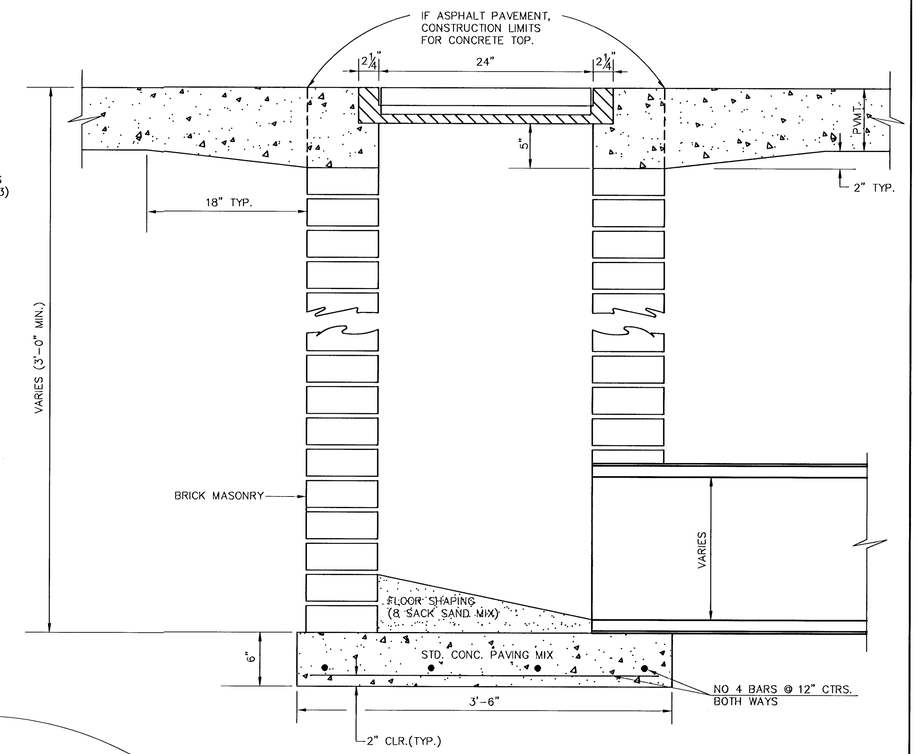

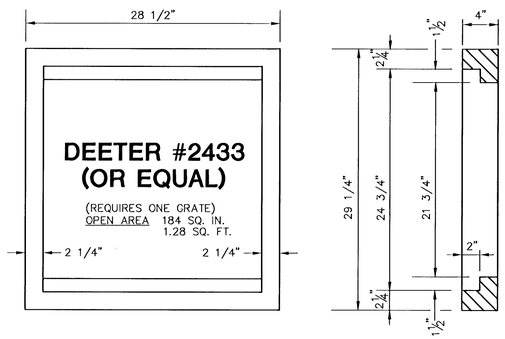

SINGLE 24"x24" FRAME DETAIL

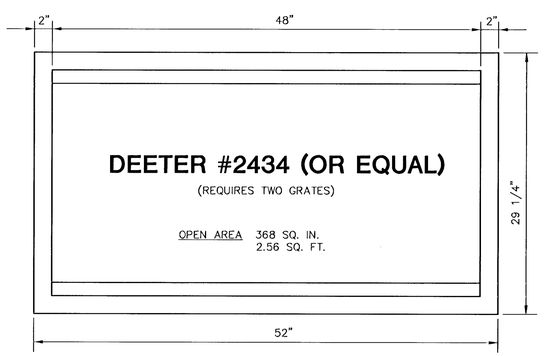

DOUBLE 24"x24" FRAME DETAIL

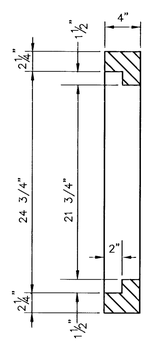

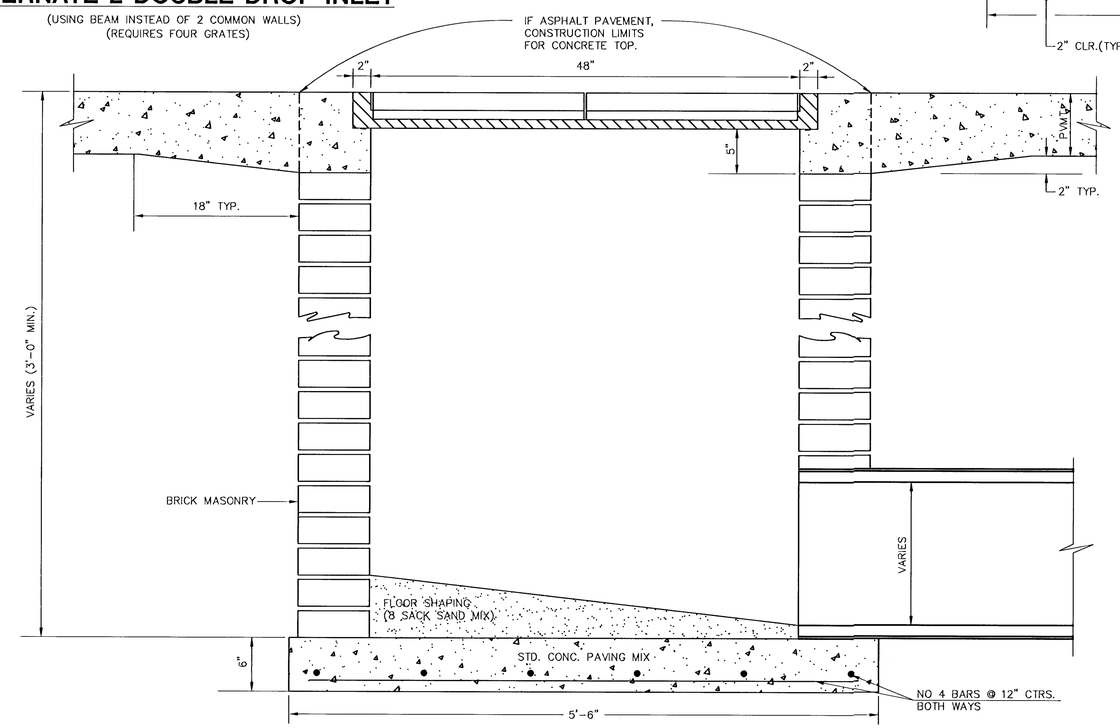

ORIFICE EQUATION		
$Q=C*A*\sqrt{2gh}$ C=0.60		
h (DEPTH)	#2433 (SINGLE)	#2434 (DOUBLE)
0.1	1.95 cfs	3.89 cfs
0.2	2.75 cfs	5.50 cfs
0.3	3.37 cfs	6.74 cfs
0.4	3.89 cfs	7.78 cfs
0.5	4.35 cfs	8.70 cfs
0.6	4.77 cfs	9.53 cfs
0.7	5.15 cfs	10.30 cfs
0.8	5.50 cfs	11.01 cfs
0.9	5.84 cfs	11.67 cfs
1.0	6.15 cfs	12.30 cfs

REVISED: 5-8-90 JNJ

DROP INLET DETAILS

CITY OF WICHITA, KANSAS

Design C.O.W.	Checked by	Checked by	21 / 32
Drawn by	Date	Date SEPT. 1997	Job No. 96081DD1

G:\CIVIL\96081\HALLMARK\PHASE2\SWS\01123DD3.DWG Tue Jun 26 14:28:40 2001
I:\LIBRARY\CIVIL\SAN\SG-CO\KP_JMHDTL.DWG