PROJECT NO.	SHEET NO.	TOTAL SHEETS
472-76-245-81892-000-000-001	8	10

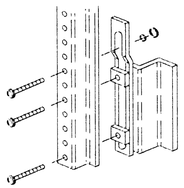

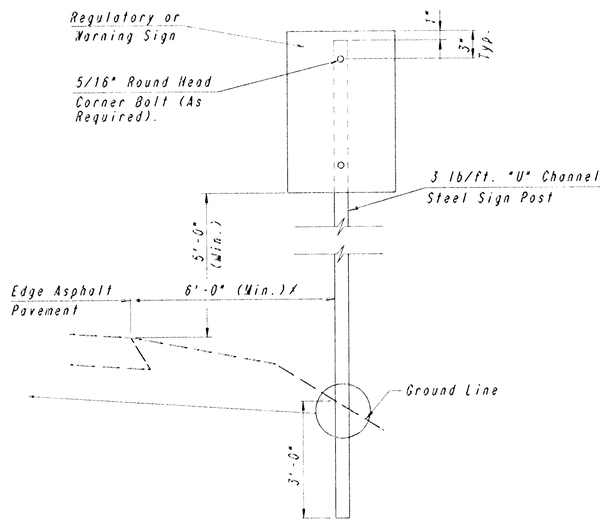

TYPICAL TRAFFIC CONTROL SIGN MOUNTING INSTALLATION
OPEN DITCH SECTION

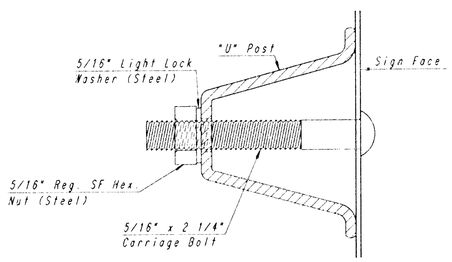

TRAFFIC CONTROL SIGN MOUNTING DETAIL

* Or as directed by the Engineer.

GENERAL NOTES - SIGNING

NOTE: REFERENCES BELOW TO "STANDARD SPECIFICATIONS" DENOTE "STANDARD SPECIFICATION FOR STATE ROAD AND BRIDGE CONSTRUCTION, EDITION 1990" BY THE KANSAS DEPARTMENT OF TRANSPORTATION.

1. POST ANCHORS. POSTS SHALL BE ANCHORED WITH A YIELDING BASE POST SUPPORT AS DETAILED.
2. POSTS FOR TRAFFIC CONTROL SIGNS. POSTS SHALL CONFORM TO THE REQUIREMENTS OF SUBSECTION 1620 OF THE STANDARD SPECIFICATIONS EXCEPT THAT ALL POSTS SHALL WEIGH 3 LBS./FOOT MINIMUM.
3. SIGN BLANKS FOR TRAFFIC CONTROL SIGNS. SIGN BLANKS SHALL BE FABRICATED FROM 0.080" ALUMINUM ALLOY 6063-T6 CONFORMING TO THE REQUIREMENTS OF SUBSECTION 1628 OF THE STANDARD SPECIFICATIONS.
4. FASTENERS. ALL STEEL FASTENERS FOR TRAFFIC CONTROL SIGNS SHALL BE GALVANIZED AND SHALL CONFORM TO THE REQUIREMENTS OF SUBSECTION 1614 OF THE STANDARD SPECIFICATIONS.
5. REFLECTIVE SHEETING. REFLECTIVE SHEETING SHALL BE TYPE II - HIGH PERFORMANCE CLASS IIA IN ACCORDANCE WITH SUBSECTION 2201 OF THE STANDARD SPECIFICATIONS.
6. PROCESS INK. ALL PROCESS INK SHALL CONFORM TO THE REQUIREMENTS OF SUBSECTION 2202 OF THE STANDARD SPECIFICATIONS.
7. DETAILS. REGULATORY AND WARNING SIGNS SHALL CONFORM TO THE DETAILS IN "STANDARD HIGHWAY SIGNS", FHWA, 1979.
8. TRAFFIC CONTROL SIGNS. TRAFFIC CONTROL SIGNS SHALL BE MEASURED AND PAID FOR AT THE BID PRICE FOR EACH. THE PAYMENT AS SET FORTH ABOVE SHALL BE CONSIDERED FULL COMPENSATION FOR ALL EXCAVATION, BACKFILLING, POSTS, ANCHORS, FASTENERS, MATERIALS, LABOR, TOOLS AND INCIDENTALS NECESSARY TO COMPLETE THIS WORK.

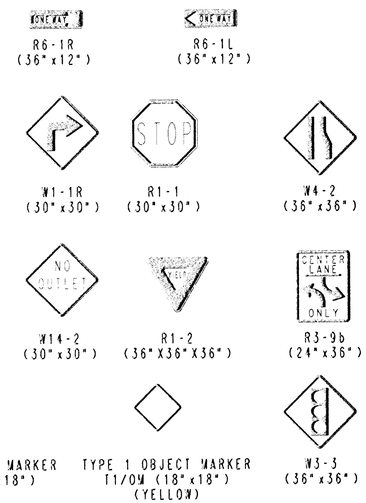

SIGN ASSEMBLY TABLE

STREET	STATION	OFFSET	SIGN	QUANTITY
21ST STREET NORTH	1037+70	50' RT	R3-9b	1
TOTAL				1

BILL OF MATERIALS *

PROJ. NO. 472-76-245-81892-000-000-001

COLD PLASTIC PAVEMENT MARKING (4" YELLOW)	2182	L.F.
COLD PLASTIC PAVEMENT MARKING (SYMBOL)	7	EACH
COLD PLASTIC PAVEMENT MARKING (4" WHITE)	50	L.F.

* FOR INFORMATION ONLY. TO BE PAID FOR UNDER THE BID ITEM "PAVEMENT MARKING - LUMP SUM"

21ST STREET NORTH

PAVEMENT MARKING AND SIGNING DETAILS

PROFESSIONAL ENGINEERING CONSULTANTS, P.A.
ENGINEERS
WICHITA, KANSAS

Designed by	WWB, GDD	Checked by	
Drawn by	DEP	Date APR., 1995	Job No. 94420-3

8

PLAN
SURVEYED
PLOTTED
NOTE BOOK
NO.
PLAN WAS CHECKED
RE OF WAY CHECKED
BY
DATE

DRAWING NAME 32-94420-3 RTURN MARK
LOCATION 34 41003
CENTER COORDINATES
ROTATION ANGLE
DATE LAST WORKED ON: APRIL 5, 1995
DWAINE DUNN