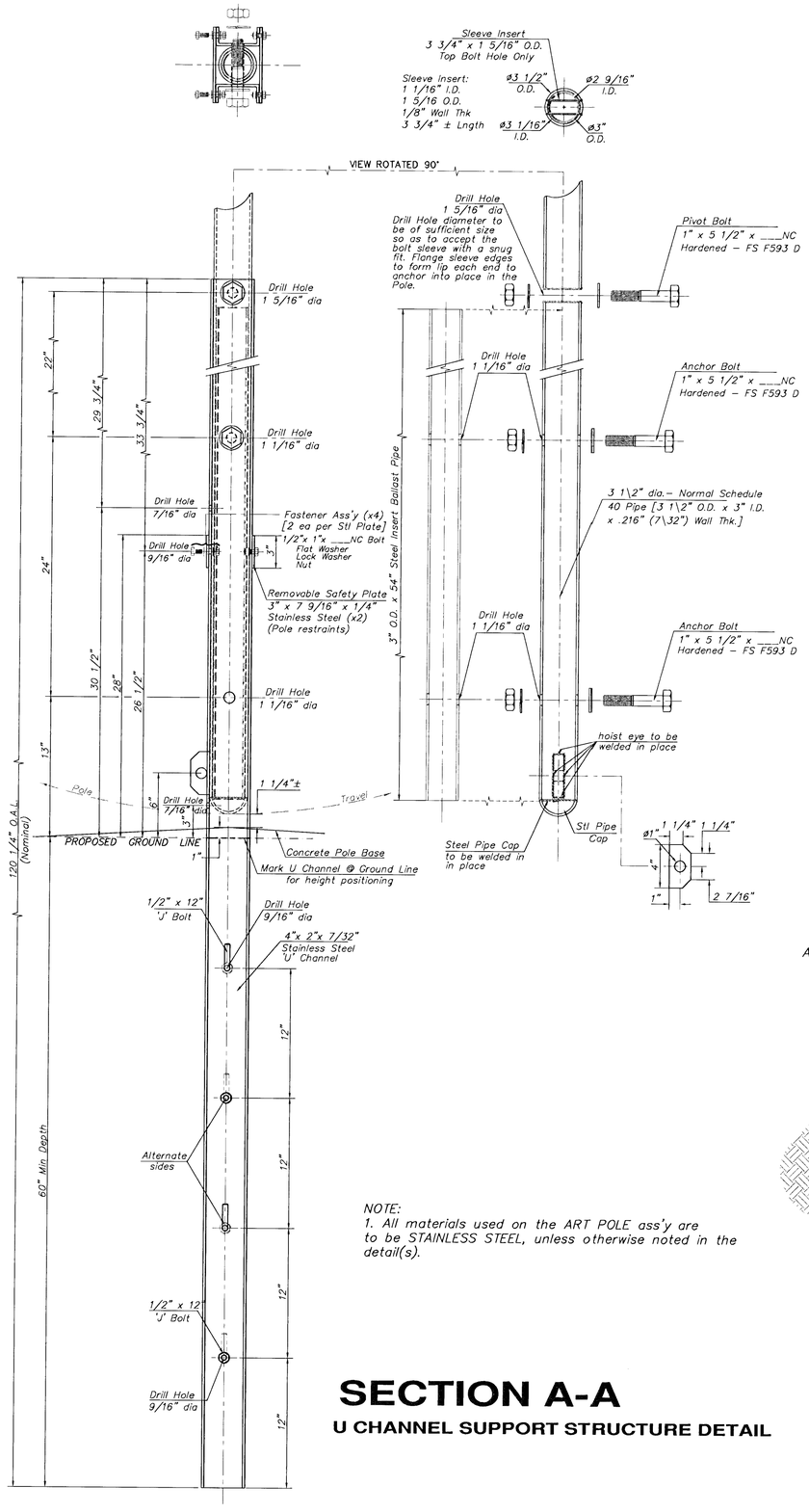

NOTE:
1. All materials used on the ART POLE ass'y are to be STAINLESS STEEL, unless otherwise noted in the detail(s).

SECTION A-A

U CHANNEL SUPPORT STRUCTURE DETAIL

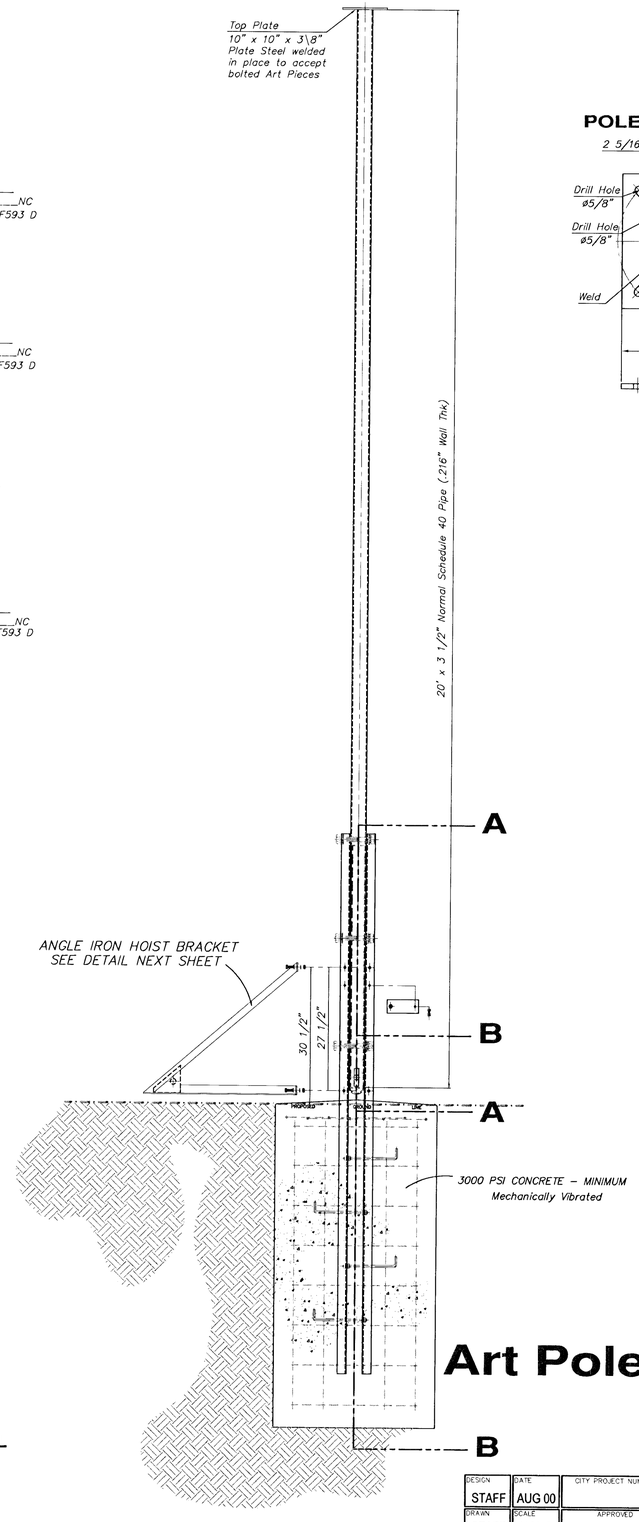

Art Pole

POLE TOP DETAIL

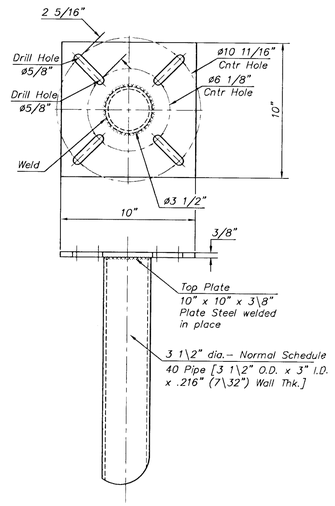

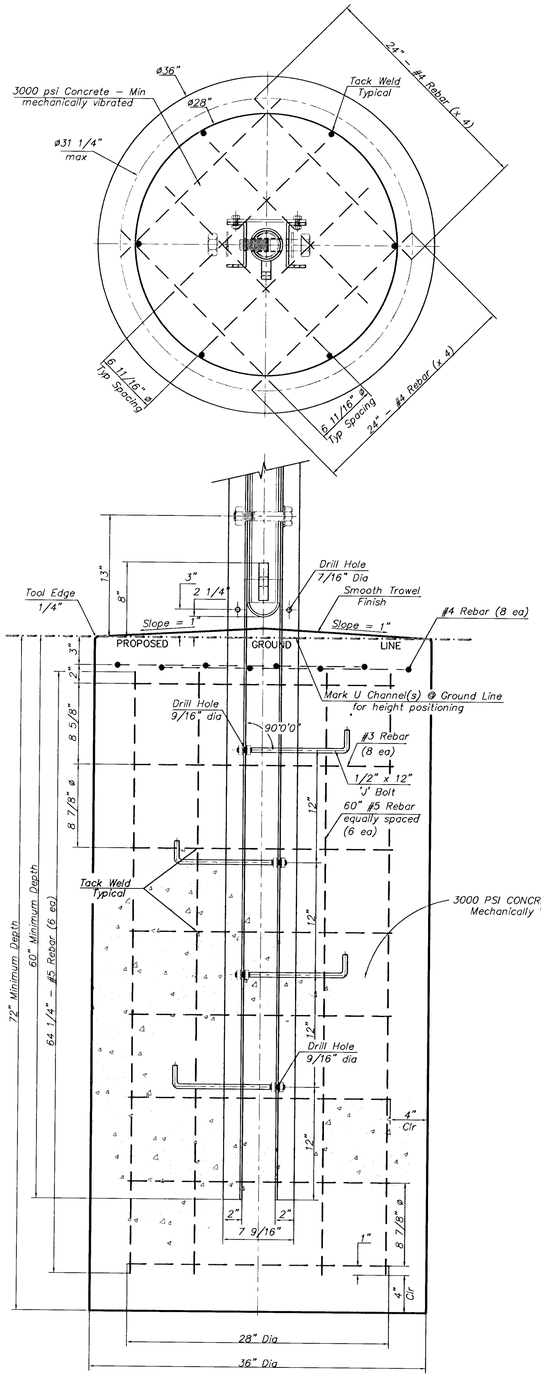

SECTION B-B

CONCRETE FOUNDATION \ REINFORCING DETAIL

VIEW ROTATED 90°

DESIGN	DATE	CITY PROJECT NUMBER	BAUGHMAN PROJECT NUMBER: 98-01-E965
STAFF	AUG 00		DIRECTORY: F:\MCL\INT\LSCAPE
DRAWN	SCALE	APPROVED	SHEET & DRAWING: ARTPOLE.DWG
STAFF	NONE	JFB	

CAPITAL IMPROVEMENT PROJECT
ART POLE DETAILS
CENTRAL AVE & ZOO BLVD INTERSECTION IMPROVEMENTS

BAUGHMAN COMPANY P. A.
ENGINEERING, SURVEYING, & PLANNING
316-262-7271 • 315 ELLIS • WICHITA, KANSAS 67211

SHEET 7 OF 8