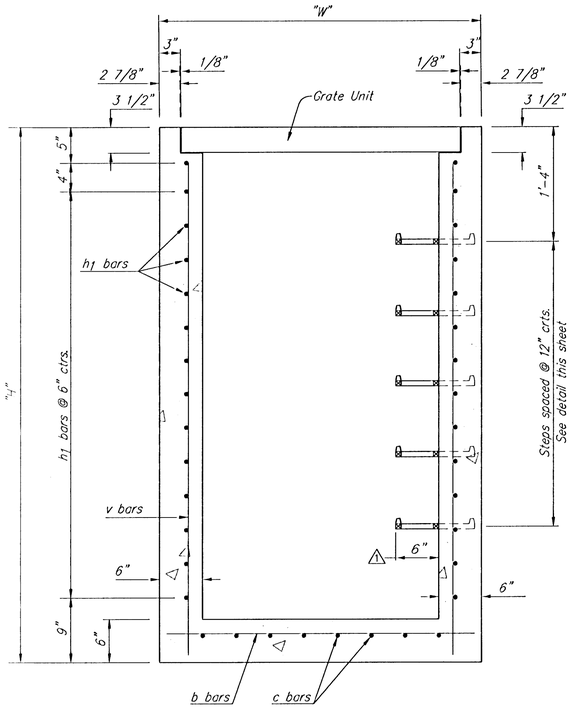

SECTION

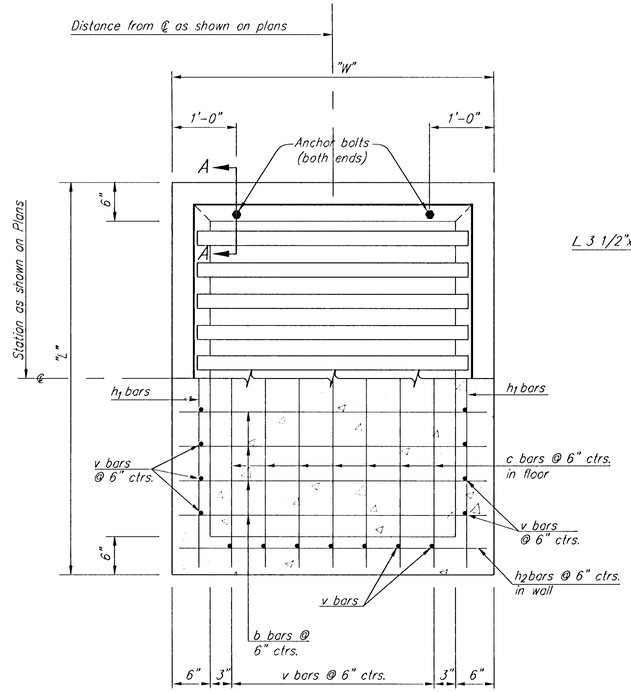

PLAN AND SECTION

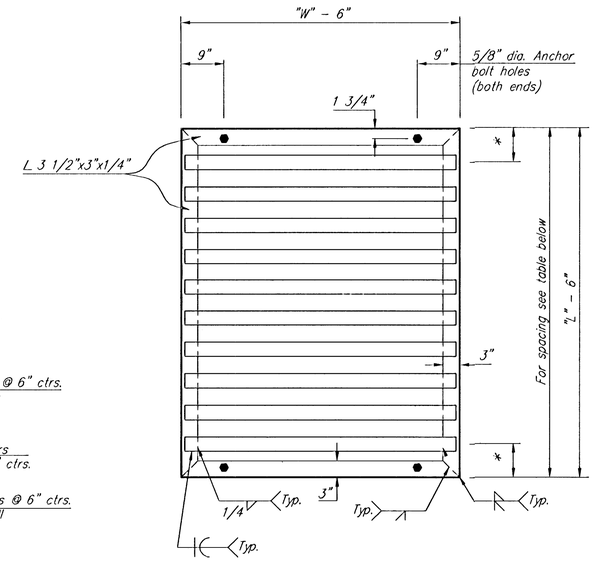

GRATE UNIT DETAILS

GENERAL NOTE

Use Class A Concrete throughout. All exposed edges shall be finished with an edging tool.

At the Contractors option, Class A Concrete (AE) or mix used in concrete pavement may be used throughout.

In general, pipes will enter and leave the manhole at various positions. Where possible bend bars around pipes.

Floor of inlet shall be shaped as shown in various "Examples" on Reinforced Concrete Manhole Standard No. 633. Concrete used for shaping shall be unreinforced Class "A" Concrete or concrete pavement mix. No addition in concrete quantities shall be made for shaping floor of inlets.

Manhole steps, where used, shall be placed to afford easy access to top of shaped invert.

No deductions in concrete quantities shall be made for pipe openings.

All bars are #4 @ 6" spacing and shall have a minimum clearance of 1 1/2" unless otherwise noted on the plans.

The top of the manhole shall be sloped slightly to approximately fit the ground line or other conditions as directed by the Engineer.

Steps shall be installed on all storm sewer inlets when specified in the plans or when "H" is equal or greater than six feet. Steps shall comply with KDOT Standard Specification.

The grate shall be fabricated from standard or commercial grade structural steel and black steel pipe. The unit shall be hot dipped, galvanized after fabrication, in accordance with ASTM A123 except the weight of coating shall average not less than 2.0 ounces per square foot of actual surface and no individual test shall show less than 1.8 ounces of coating per square foot of actual surface area.

** Unless otherwise provided for, quantities shown are for information only.

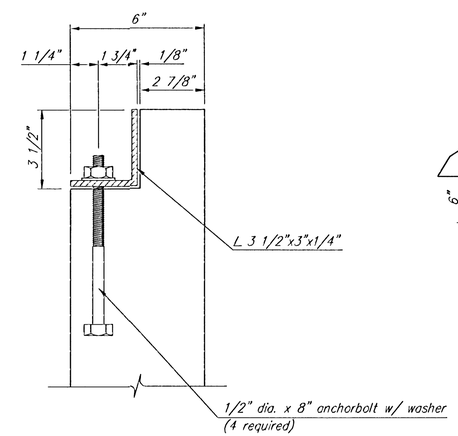

SECTION A-A

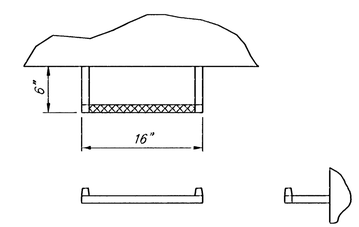

STEP DETAILS

BILL OF MATERIALS FOR INLET-MANHOLE (SPECIAL)

"L" "W" "H"				"L" "W" "H"				"L" "W" "H"															
Bar	No.	Size	Length	Bar	No.	Size	Length	Bar	No.	Size	Length	Bar	No.	Size	Length	Bar	No.	Size	Length	Bar	No.	Size	Length
v		#4	X	v		#4		v		#4		v		#4		v		#4		v		#4	
c		#4	X	c		#4		c		#4		c		#4		c		#4		c		#4	
b		#4	X	b		#4		b		#4		b		#4		b		#4		b		#4	
h_1		#4	X	h_1		#4		h_1		#4		h_1		#4		h_1		#4		h_1		#4	
h_2		#4	X	h_2		#4		h_2		#4		h_2		#4		h_2		#4		h_2		#4	
Class "A" Conc.			Cu. Yd.	Class "A" Conc.			Cu. Yd.	Class "A" Conc.			Cu. Yd.	Class "A" Conc.			Cu. Yd.	Class "A" Conc.			Cu. Yd.	Class "A" Conc.			Cu. Yd.
Reinf. Steel			Lbs.	Reinf. Steel			Lbs.	Reinf. Steel			Lbs.	Reinf. Steel			Lbs.	Reinf. Steel			Lbs.	Reinf. Steel			Lbs.
Struct. Steel			Lbs.	Struct. Steel			Lbs.	Struct. Steel			Lbs.	Struct. Steel			Lbs.	Struct. Steel			Lbs.	Struct. Steel			Lbs.
Class III Excav.			Cu. Yd.	Class III Excav.			Cu. Yd.	Class III Excav.			Cu. Yd.	Class III Excav.			Cu. Yd.	Class III Excav.			Cu. Yd.	Class III Excav.			Cu. Yd.

BILL OF MATERIALS FOR INLET-MANHOLE (SPECIAL)

"L" "W" "H"				"L" "W" "H"				"L" "W" "H"				"L" "W" "H"				"L" "W" "H" 4'-6" x 4'-6" x 4'-6"				"L" "W" "H" 5'-6" x 4'-6" x 5'-0"			
Bar	No.	Size	Length	Bar	No.	Size	Length	Bar	No.	Size	Length	Bar	No.	Size	Length	Bar	No.	Size	Length	Bar	No.	Size	Length
v		#4		v		#4		v		#4		v		#4		v		#4		v		#4	
c		#4		c		#4		c		#4		c		#4		c		#4		c		#4	
b		#4		b		#4		b		#4		b		#4		b		#4		b		#4	
h_1		#4		h_1		#4		h_1		#4		h_1		#4		h_1		#4		h_1		#4	
h_2		#4		h_2		#4		h_2		#4		h_2		#4		h_2		#4		h_2		#4	
Class "A" Conc.			Cu. Yd.	Class "A" Conc.			Cu. Yd.	Class "A" Conc.			Cu. Yd.	Class "A" Conc.			Cu. Yd.	Class "A" Conc.			Cu. Yd.	Class "A" Conc.			Cu. Yd.
Reinf. Steel			Lbs.	Reinf. Steel			Lbs.	Reinf. Steel			Lbs.	Reinf. Steel			Lbs.	Reinf. Steel			Lbs.	Reinf. Steel			Lbs.
Struct. Steel			Lbs.	Struct. Steel			Lbs.	Struct. Steel			Lbs.	Struct. Steel			Lbs.	Struct. Steel			Lbs.	Struct. Steel			Lbs.
Class III Excav.			Cu. Yd.	Class III Excav.			Cu. Yd.	Class III Excav.			Cu. Yd.	Class III Excav.			Cu. Yd.	Class III Excav.			Cu. Yd.	Class III Excav.			Cu. Yd.

PIPE DIMENSIONS AND SPACING

L x W	No. of Bars	Dia. x Length x Spacing	*
13'-6"x4'-0"	25	2 1/2"ø x 3'-4 1/4" pipes @ 6" ctrs.	6"

⚠ - Baughman Company Revision 3/1/95

INLET MANHOLE

BAUGHMAN COMPANY P. A.
ENGINEERING & SURVEYING
316/262-7271 • 315 ELLIS • WICHITA, KANSAS 67211

DRAWN BY	DATE	JOB NO.	FILENAME
MS	5-5-99	472-82904	INLETMH.DWG