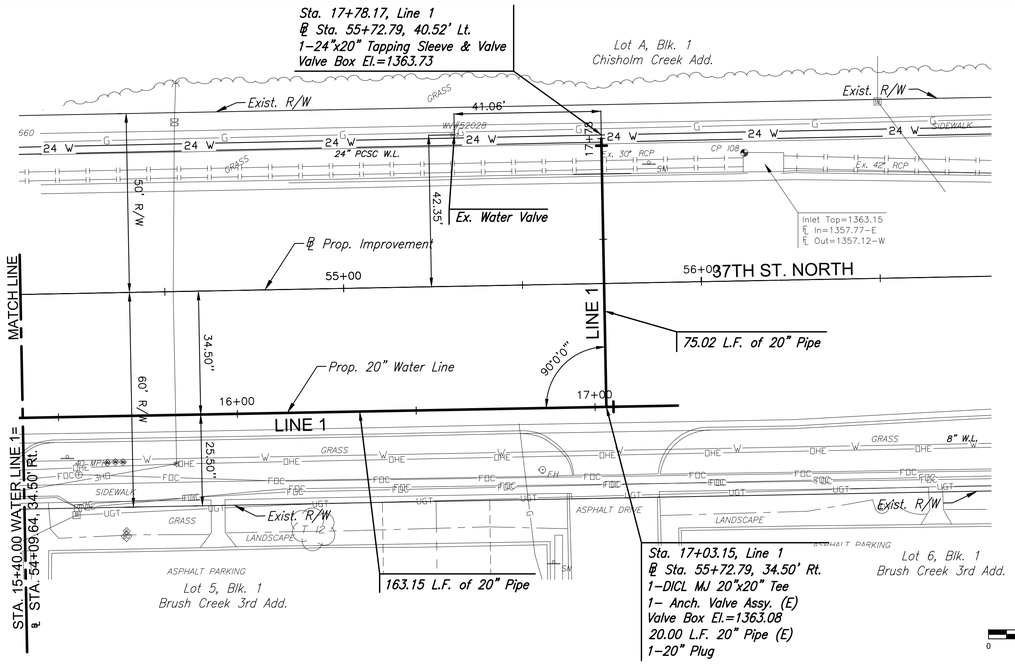

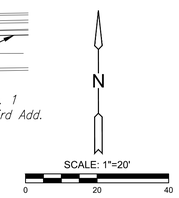

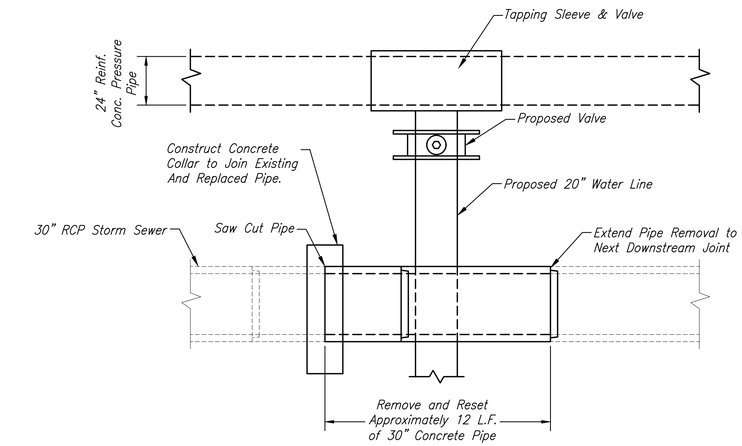

30" RCP PIPE REMOVE AND REPLACE

NOTE: Contractor to verify distance between 24" water line and 30" storm sewer and determine if distance is sufficient to install tapping sleeve and valve without removing and replacing storm sewer. This work to be accomplished only upon approval of the engineer

PLAN - WATER LINE 1 - CONT.

PROFILE - WATER LINE 1 - CONT.

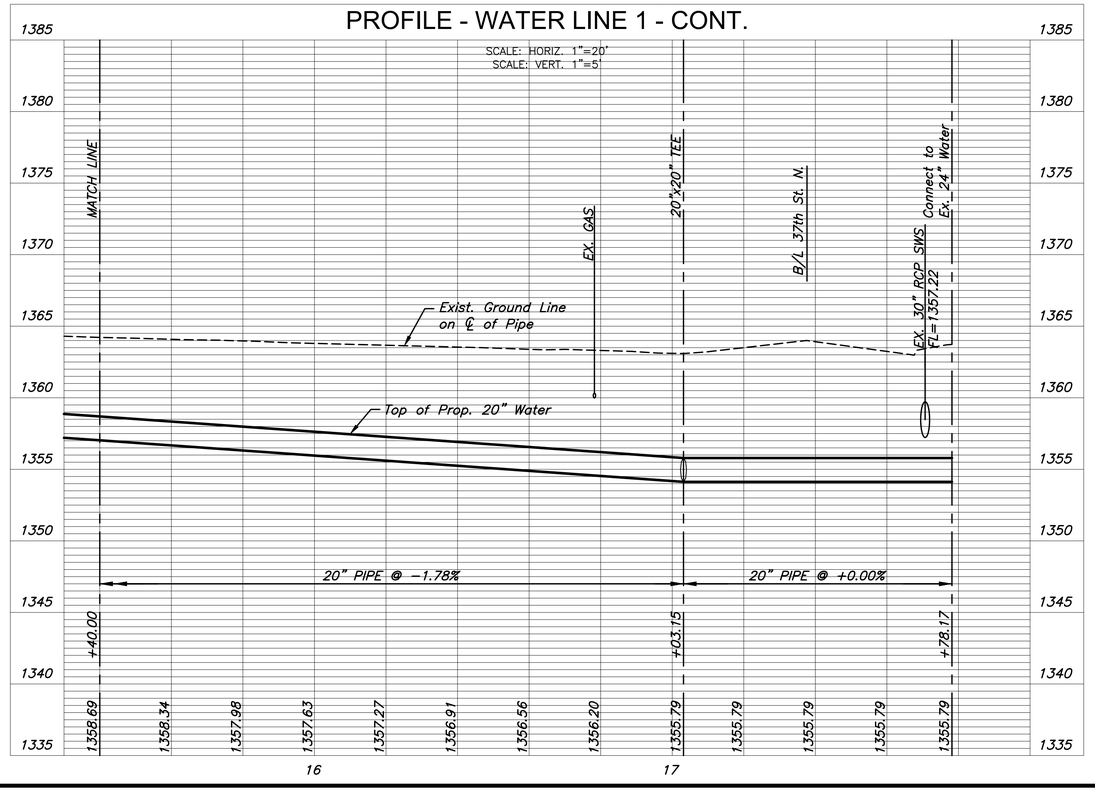

NOTES:
SEE SHEET 9 FOR PAVEMENT PLANS.

CONTRACTOR TO VERIFY LOCATION AND ELEVATION OF EXISTING WATER LINE PRIOR TO CONSTRUCTION.

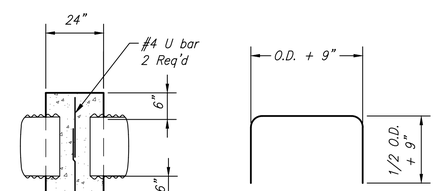

BENDING DIAGRAM

All dimensions are out-to-out of bars

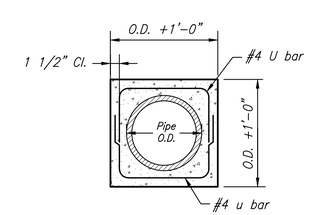

ELEVATION

CONCRETE COLLAR DETAIL

MICHAEL T. CLAYTON
E-24322
14342
PROFESSIONAL ENGINEER
CIVIL

MKEC
Wichita, KS • 316-684-9600

PLANS FOR

37TH STREET WATER LINE

WICHITA, KS

©2021
MKEC Engineering
All Rights Reserved
www.mkec.com
These drawings and their contents, including, but not limited to, all concepts, designs, & ideas are the exclusive property of MKEC Engineering (MKEC), and may not be used or reproduced in any way without the express consent of MKEC.

WATER LINE 1
PLAN & PROFILE

PROJECT NO.	1901010483
DATE	DEC. 2021
SCALE	1"=20'

DESIGNED	DRAWN	CHECKED
JTC	WNJ	JRA

NO.	REVISION	DATE

SHEET NO.

6 OF 31

Sh. No. 6

PLOTTED: Thursday, December 23, 2021 @ 12:49PM
J:\PROJECTS\2019\1901010483_COV_37TH STREET WATERLINE_190483 CAD\SHTS\05 CIVIL\WTR\190483-05-S350.DWG