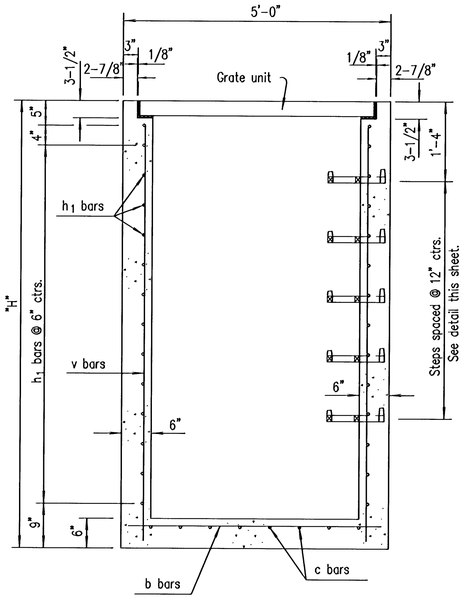
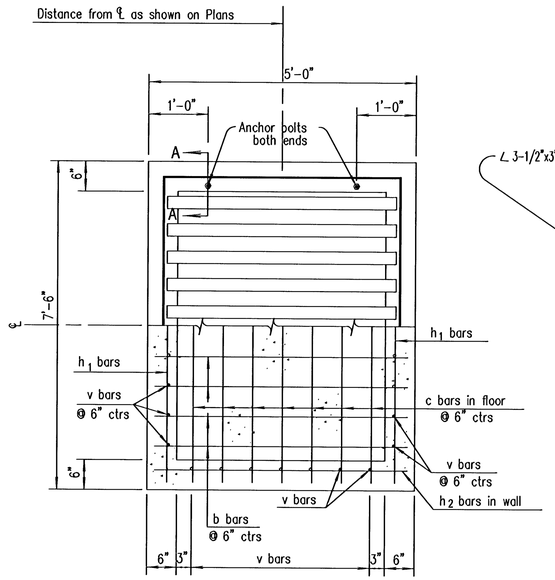
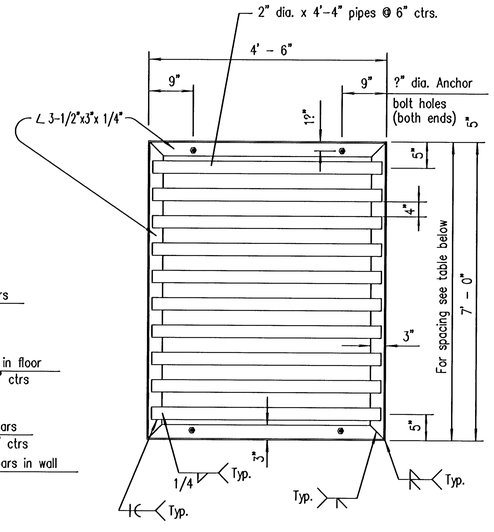


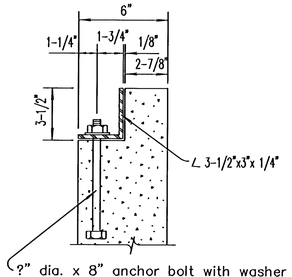
SECTION



PLAN AND SECTION

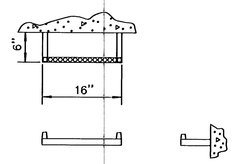


GRATE UNIT DETAILS



SECTION A-A

Note: Anchor bolts are subsidiary to the bid item "Inlet–Manhole, Special".



STEP DETAILS

GENERAL NOTE

Use Class A Concrete throughout. All exposed edges shall be finished with an edging tool.

At the contractors option, Class A Concrete (AE) or mix used in concrete pavement may be used throughout.

In general, pipes will enter and leave the manhole at various positions. Where possible bend bars around pipes.

Floor of inlet shall be shaped as shown in various "Examples" on Reinforced Concrete Manhole Standard Drawing RD633. Concrete used for shaping shall be unreinforced Class "A" Concrete or concrete pavement mix. No addition in concrete quantities shall be made for shaping floor of inlets.

Manhole steps, where used, shall be placed to afford easy access to top of shaped invert.

No deductions in concrete quantities shall be made for pipe openings.

All bars are #4 @ 6" spacing and shall have a minimum clearance of 1–1/2" unless otherwise noted on the plans.

The top of the manhole shall be sloped slightly to approximately fit the ground line or other conditions as directed by the Engineer.

Steps shall be installed on all storm sewer inlets when specified in the plans or when "H" is equal to or greater than six feet. Steps shall comply with the KDOT Standard Specification.

The grate shall be fabricated from standard or commercial grade structural steel and black steel pipe. The unit shall be hot dipped, galvanized after fabrication, in accordance with ASTM A123 except the weight of coating shall average not less than 2.0 ounces per square foot of actual surface and no individual test shall show less than 1.8 ounces of coating per square foot of actual surface area.

BRENTWOOD SOUTH ADDITION

INLET MANHOLE SPECIAL

WICHITA, KANSAS

Ruggles & Bohm, P.A.
Engineering, Surveying, Land Planning
924 North Main
Wichita, Kansas 67203
www.rbkansas.com
(316) 264-8008
(316) 264-4621 fax
E-mail: info@rbkansas.com

DESIGN	KWL
DRAWN	RA
REVIEW	
UTILITY	
DATE	June 23, 2003
SHEET	15 OF 30
BK-PG	224E
GRAWING FILE	pond plan [INLET MH SPECIAL]
PROJECT NUMBER	472–84270