FHWA REG NO.	STATE	PROJECT NO.	YEAR	SHEET NO.	SHEETS
7	KANSAS	472-84408		3	24

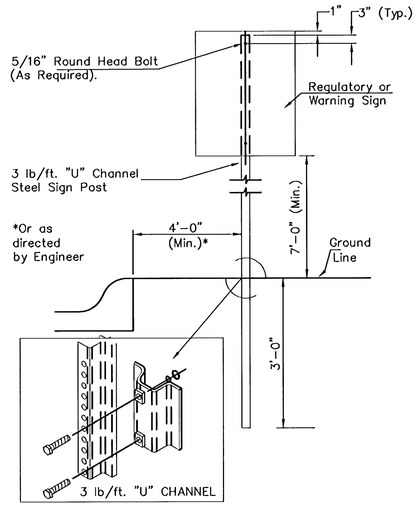

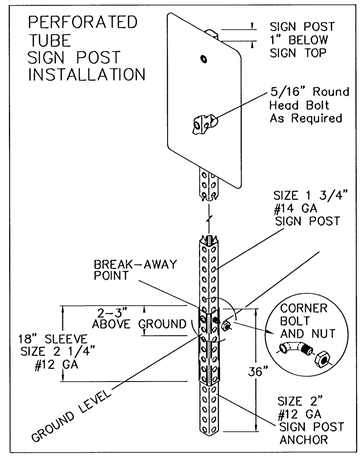

TYPICAL TRAFFIC CONTROL SIGN MOUNTING INSTALLATION

CURB AND GUTTER SECTION

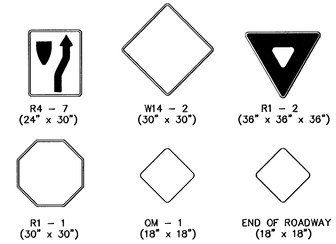

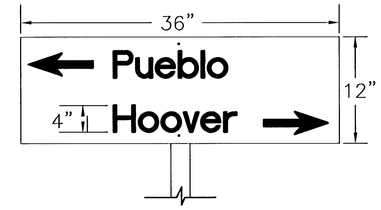

FLAT PLATE STREET NAME SIGN

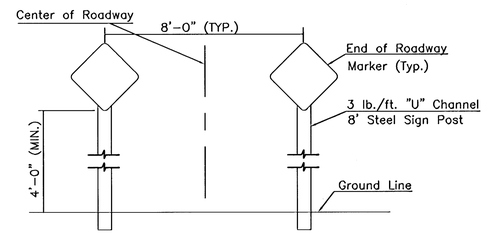

TYPICAL END OF ROADWAY SIGN MOUNTING INSTALLATION

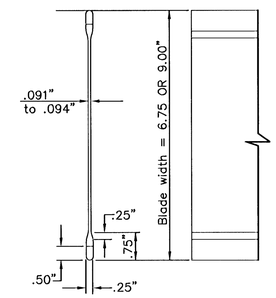

STREET NAME SIGN

BLADE DETAILS

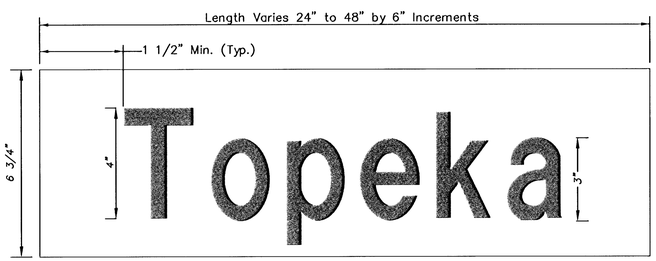

DETAIL A

6 3/4" STANDARD

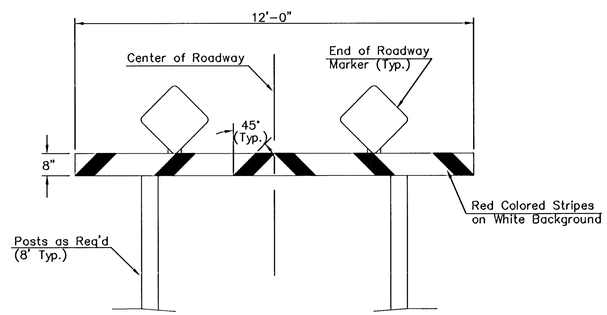

TYPE I BARRICADE DETAIL W/ E.O.R. MARKERS

SIGN ASSEMBLY TABLE

STATION	OFFSET	SIGN	QUANTITY*
Fawn Grove			
9+50	*6' LT & RT.*	*OM4-3*	*2*