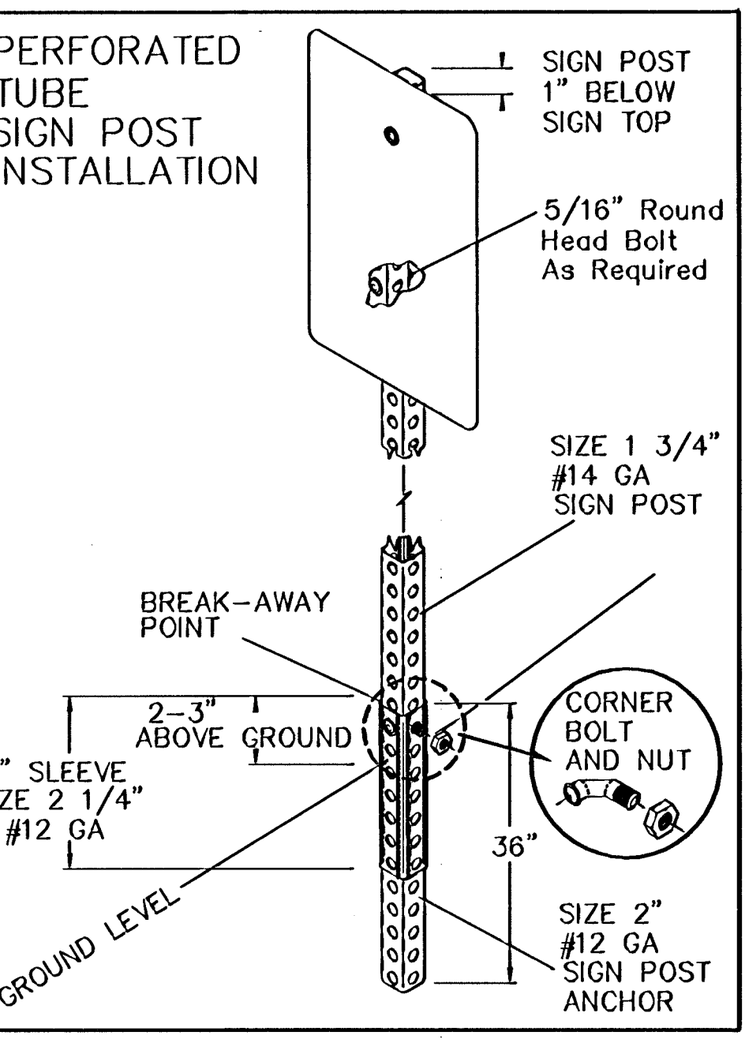

MOUNTING INSTALLATION
SECTION

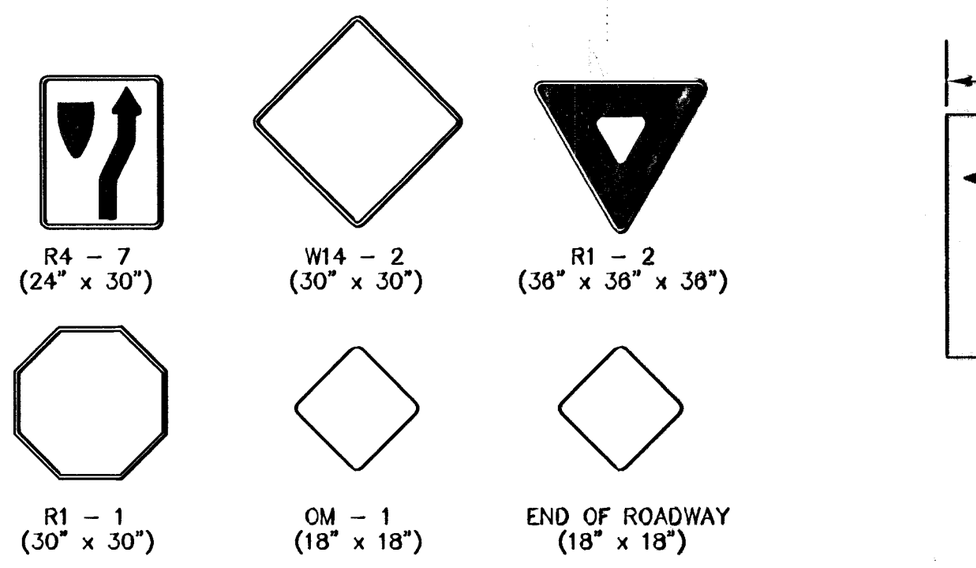

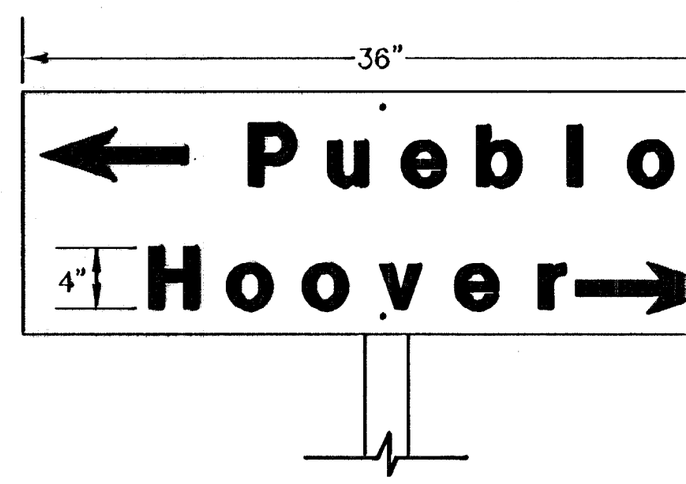

FLAT PLATE STREET NAME SIGN

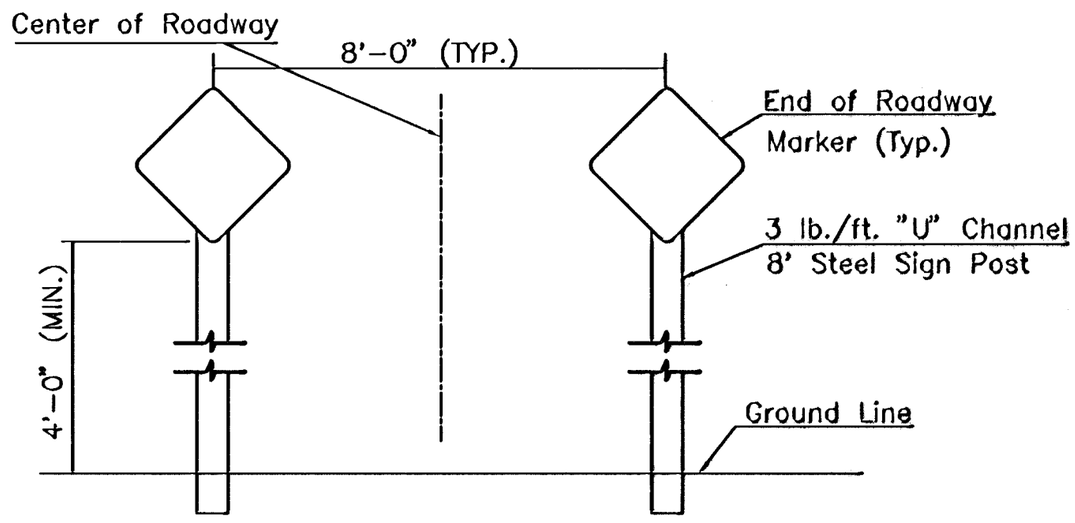

TYPICAL END OF ROADWAY SIGN MOUNTING INSTALLATION

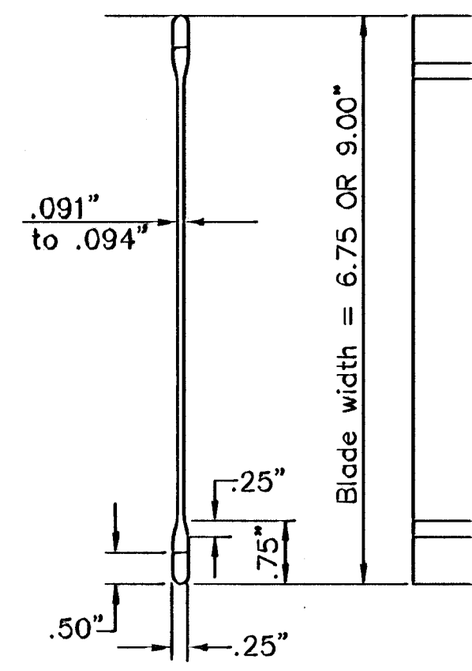

STREET NAME S
BLADE DETAILS

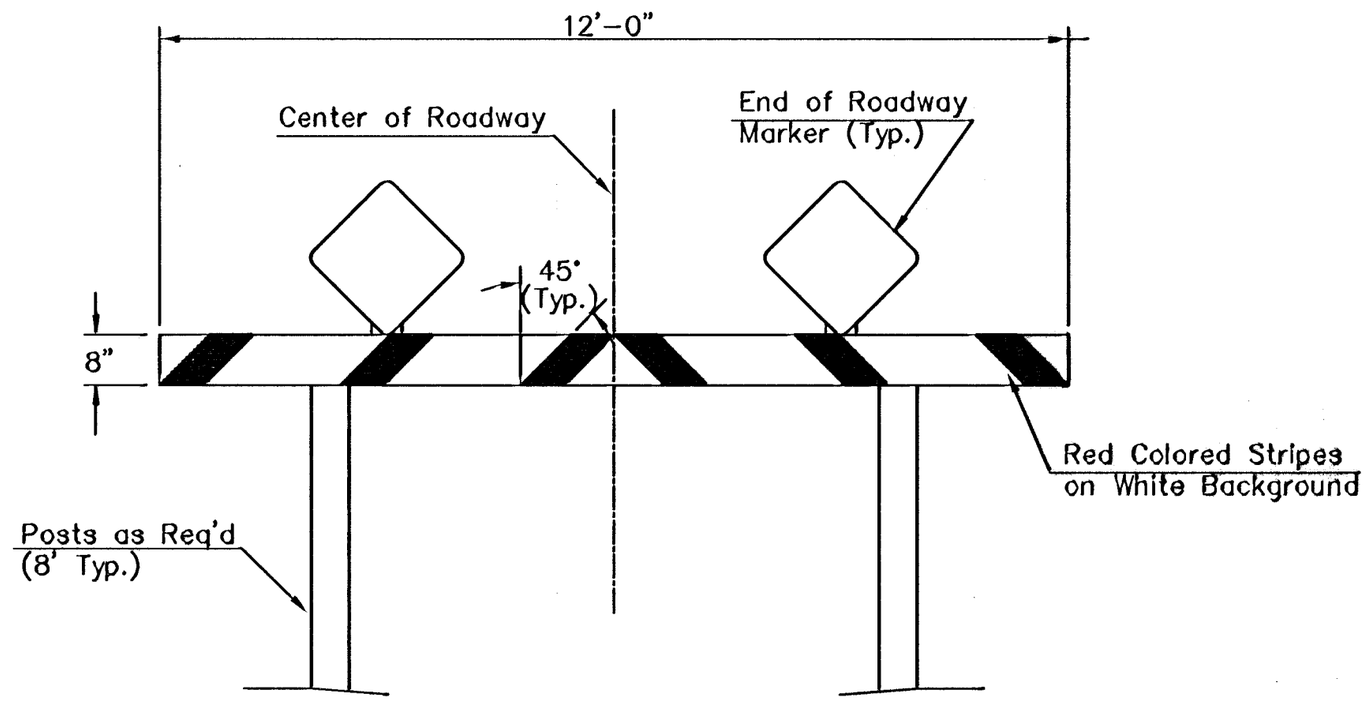

TYPE I BARRICADE DETAIL W/ E.O.R. MARKERS

crements

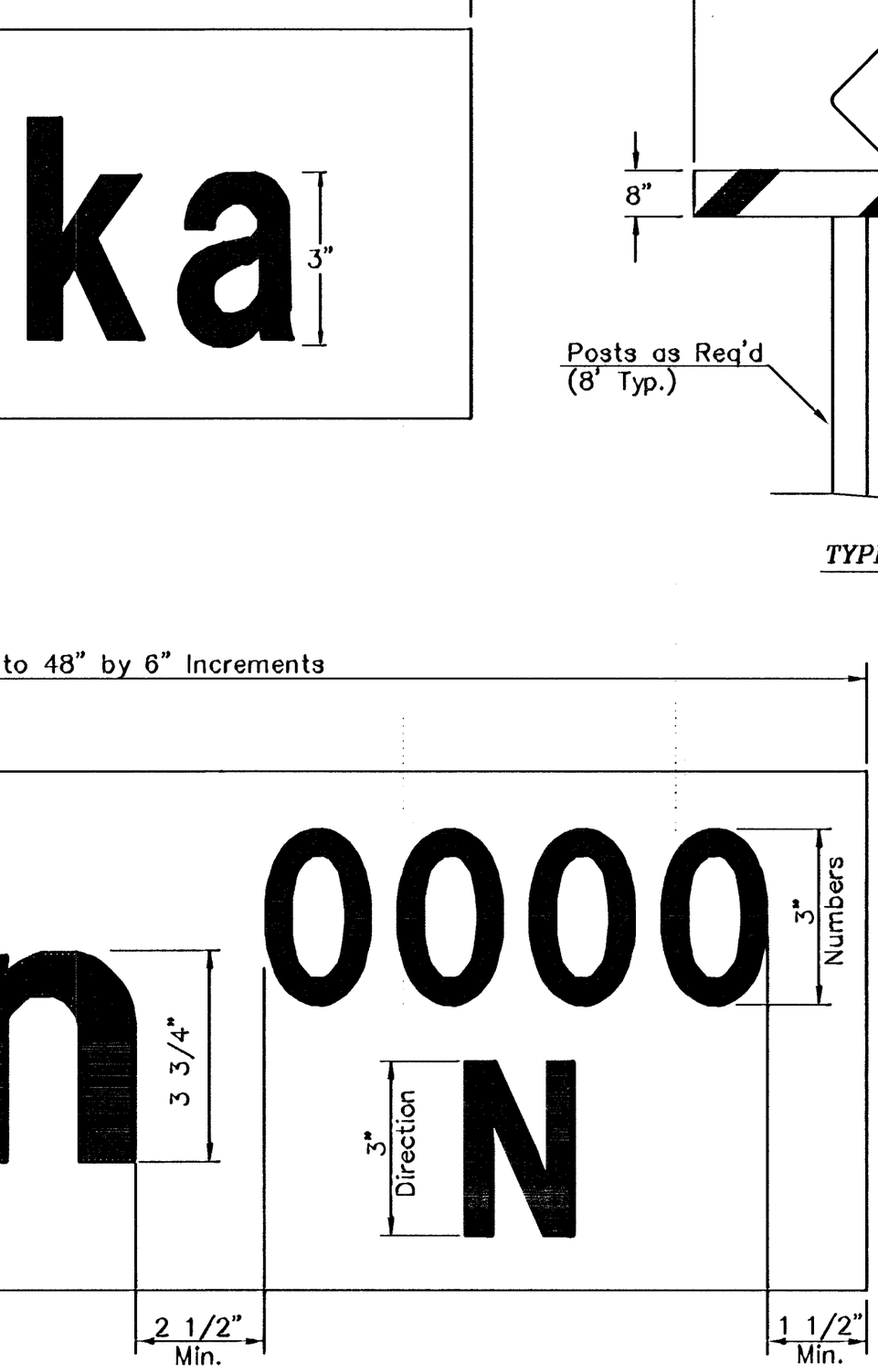

B
RO

to 48" by 6" Increments

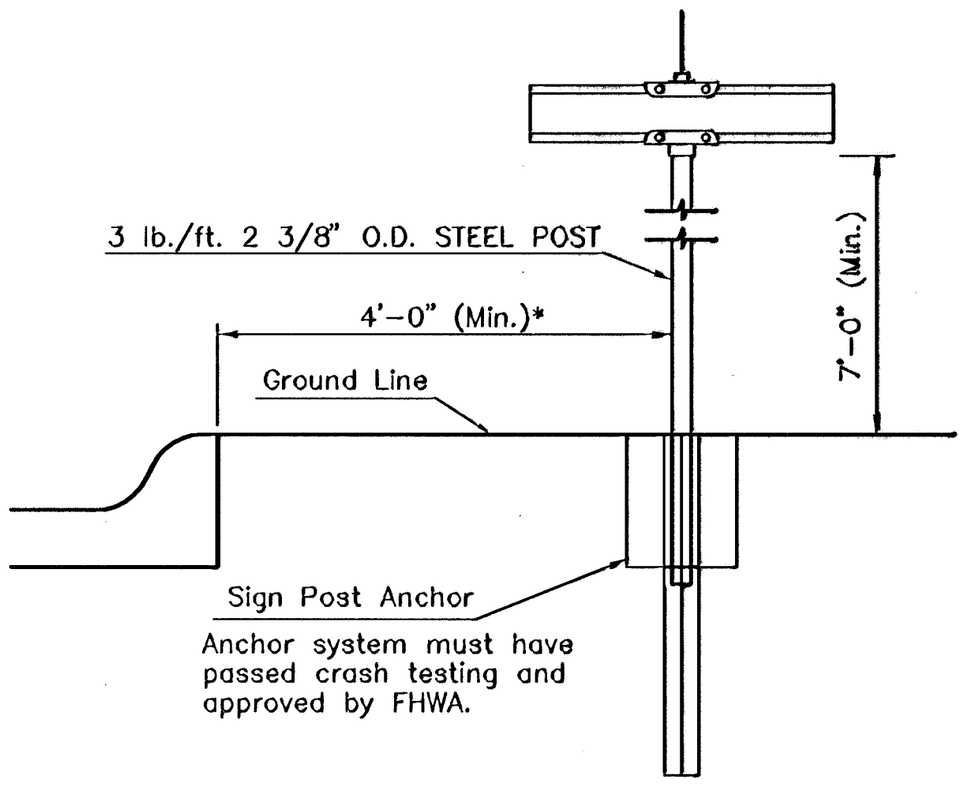

TYPICAL STREET NAME SIGN MOUNTING INSTALLATION
CURB AND GUTTER SECTION

SIGN ASSEMBLY

STATION	OFFSET	SIGN
16+90.00	22' RT.	SNS
TOTAL		

* FOR INFORMATION ONLY

STREET NAME	NO. BI 6 3/4" SI
Bridlewood	1
Bridlewood Ct 13201-13241	