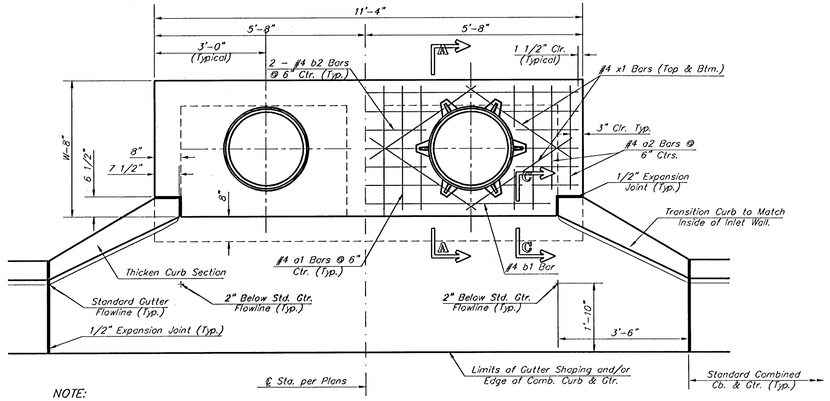

NOTE:
Expansion Joint Only in Curb Area with Concrete Pavement.

PLAN

*Left Side Shown Without Slab Reinforcing, Right Side Shown With Slab Reinforcing

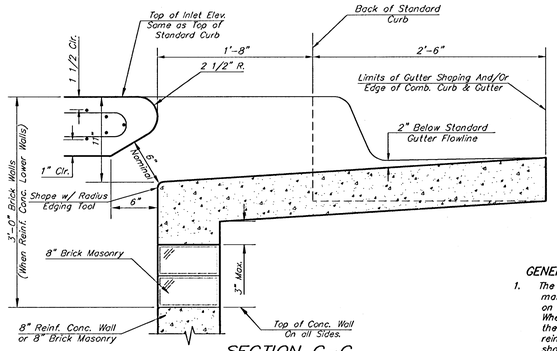

SECTION C–C

PRECAST SLAB AND FLOOR REINFORCING											
		W = 4'-4"		W = 5'-4"		W = 6'-4"		W = 7'-4"		W = 8'-4"	
MARK	SIZE	NO.	LENGTH	NO.	LENGTH	NO.	LENGTH	NO.	LENGTH	NO.	LENGTH
* a1	#4	13	6'-7"	13	8'-7"	13	10'-7"	13	12'-7"	13	14'-7"
a2	#4	4	6'-0"	4	8'-0"	4	10'-0"	4	12'-0"	4	14'-0"
a3	#4	23	4'-1"	23	5'-1"	23	6'-1"	23	7'-1	23	8'-1"
b1	#4	1	9'-9"	1	9'-9"	1	9'-9"	1	9'-9"	1	9'-9"
* b2	#4	23	11'-1"	29	11'-1"	35	11'-1"	41	11'-1"	47	11'-1"
x1	#4	16	3'-10"	16	4'-2"	16	4'-6"	16	4'-10"	16	5'-2"

WALL REINFORCING											
		W = 4'-4"		W = 5'-4"		W = 6'-4"		W = 7'-4"		W = 8'-4"	
MARK	SIZE	NO.	LENGTH	NO.	LENGTH	NO.	LENGTH	NO.	LENGTH	NO.	LENGTH
w1	#4	①	11'-1"	①	11'-1"	①	11'-1"	①	11'-1"	①	11'-1"
w2	#4	①	4'-1"	①	5'-1"	①	6'-1"	①	7'-1"	①	8'-1"
w3	#4	52	②	56	②	60	②	64	②	68	②

* Field Bend or Cut Reinforcing as Required for Clearance.
① 4 (H1 - 12") (H1 - 21") Rounded down to nearest 0.5'
② H1 - 3"

GENERAL NOTES:

1. The contractor shall be required to construct 8" brick masonry walls between the concrete inlet base and top on this inlet when W=5'-4" or less and H=7'-0" or less. When W is greater than 6'-4" and H is less than 7'-0" the outside inlet walls below the brick stack shall be reinforced concrete construction and the center wall shall be of masonry construction as shown for the masonry wall option.
2. Inlet invert shall be shaped with 8 sack sand mix concrete to create flow channels and to increase hydraulic efficiency such that the inlet will be self cleaning between all inlet and/or outlet pipes.
3. Concrete tops to be installed on thin mortar cushion to insure full support along brick walls. Concrete tops may be cast in place or precast. Concrete used for inlet construction shall be concrete pavement mix.
4. Inlet top reinforcing shall be spaced on 6" max. centers. Inlet lids shall be notched out as indicated to facilitate construction of curb. Bars in inlet top to be field bent or cut to clear manhole ring.
5. The ends of all pipes installed in inlets shall be cut off flush with the inside face of the inlet wall.

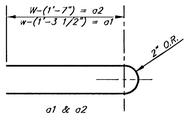

BENDING DIAGRAM

STANDARD CURB INLET PRECAST TOPS			
W	PRE-CAST TOP SIZE	PIPE SIZE	CU. YD. CONC.
4'-4"	3'-8" 11'-4" 7 1/2"	21" & SMALLER	0.83±
5'-4"	4'-8" 11'-4" 7 1/2"	24" & 30"	1.09±
6'-4"	5'-8" 11'-4" 7 1/2"	36" & 42"	1.35±
7'-4"	6'-8" 11'-4" 7 1/2"	48" & 54"	1.61±
8'-4"	7'-8" 11'-4" 7 1/2"	60" & 66"	1.87±

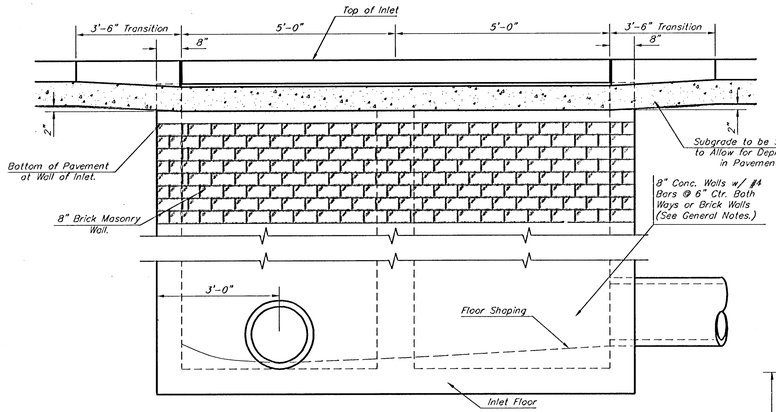

ELEVATION

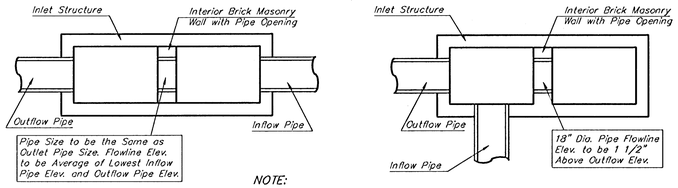

CASE I

CASE II

NOTE:
Center Wall Pipe Size shall be as Specified in Inlet Construction Notes on the Plan/Profile Sheets for those Cases not Shown Here.

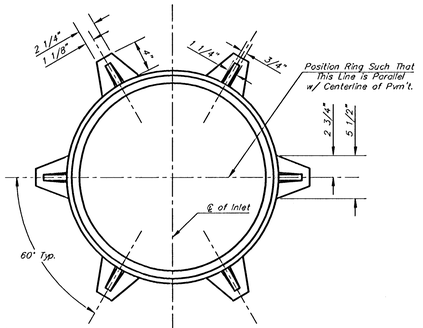

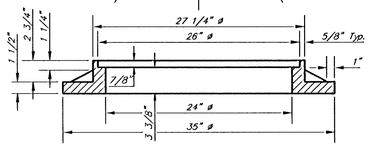

MANHOLE RING AND COVER

Weight = 180 lbs.

*See City of Wichita Standard Manhole Ring and Cover Detail Sheet for Cover Details to Be Used With Inlet Frame.

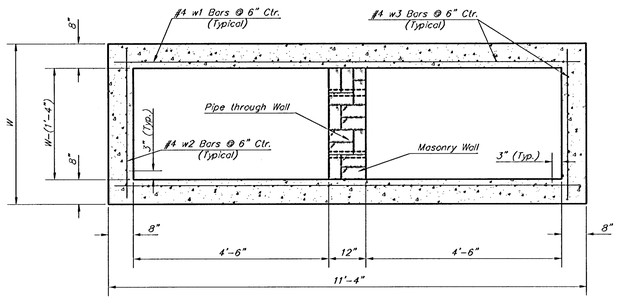

SECTION B–B

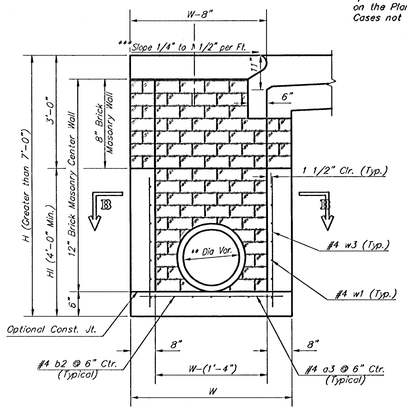

TYPICAL INLET SECTION AT CENTER WALL

(Reinforced Concrete Walls)

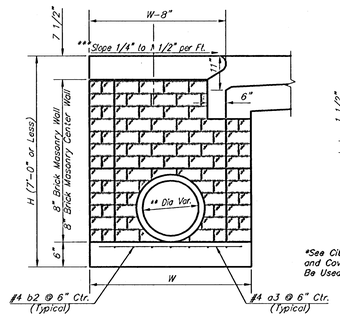

TYPICAL INLET SECTION AT CENTER WALL

(Masonry Walls)

NOTES:

** A center wall opening shall be provided by means of a section of reinforced concrete pipe. See Case I and Case II above.

*** Slope of inlet tops to match sidewalk of parking slopes within limits indicated

Baughman

CITY OF WICHITA STANDARD TYPE 1A

Curb Inlet Details

INLET OPENING = 6' X 10'-0"

Baughman Company, P.A. 315 Ellis St. Wichita, KS 67211 P 316.262.2771 F 316.262.0149
ENGINEERING | SURVEYING | PLANNING | LANDSCAPE ARCHITECTURE

PROJECT NUMBER	DESIGN	DRAWN
472-84262	C.O.W.	STAFF
REVISIONS: Feb. 16, 1989	APPROVED	DATE 08/05
	SCALE NONE	
	SHEET 28 OF 52	

\TrpIAD