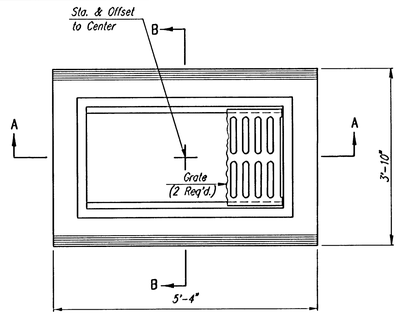

PLAN

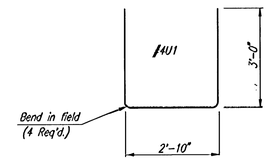

BENDING DIAGRAM

GENERAL NOTES

CONCRETE SHALL BE C.O.W. STANDARD PAVING MIX. ALL EXPOSED EDGES SHALL BE FINISHED WITH AN APPROVED EDGING TOOL.

REINFORCING STEEL SHALL BE A MINIMUM GRADE 40, A.S.T.M. A615. ALL DIMENSIONS RELATIVE TO PLACEMENT OF REINFORCING ARE TO THE CENTERLINE OF BARS UNLESS OTHERWISE NOTED.

INLET CASTINGS SHALL BE MANUFACTURED USING GOOD QUALITY GRAY IRON CONFORMING TO CLASS 30 OF A.S.T.M. DESIGNATION A-48. DIMENSIONS AND WEIGHTS SHOWN ON THE DETAILED DRAWINGS SHALL BE CONSIDERED AS MINIMUM REQUIREMENTS AND ANY DEVIATIONS FROM THE DIMENSIONS SHOWN MUST BE SPECIFICALLY APPROVED. THE FINISHED CASTINGS SHALL BE OF UNIFORM QUALITY, FREE FROM BLOWHOLES, POROSITY, HARD SPOTS, SHRINKAGE DISTORTIONS OR OTHER DEFECTS.

CONSTRUCTION REQUIREMENTS AND MATERIALS FOR MASONRY WALLS SHALL CONFORM TO THE REQUIREMENTS OF THE STANDARD SPECIFICATIONS.

INLET FLOOR SHALL BE SHAPED WITH UNREINFORCED CONCRETE (8 SACK SAND MIX) TO CREATE FLOW CHANNELS AND TO INCREASE HYDRAULIC EFFICIENCY SUCH THAT THE INLET WILL BE SELF CLEANING BETWEEN ALL INLET AND/OR OUTLET PIPES.

AREA INLETS SHALL BE MEASURED AND PAID FOR AT THE CONTRACT UNIT PRICE BID PER EACH. THIS SHALL BE CONSIDERED FULL COMPENSATION FOR ALL EXCAVATION, BACKFILLING, MATERIALS, LABOR, CONNECTION TO EXISTING STRUCTURES (IF REQUIRED), EQUIPMENT, TOOLS, AND INCIDENTALS NECESSARY TO COMPLETE THE WORK.

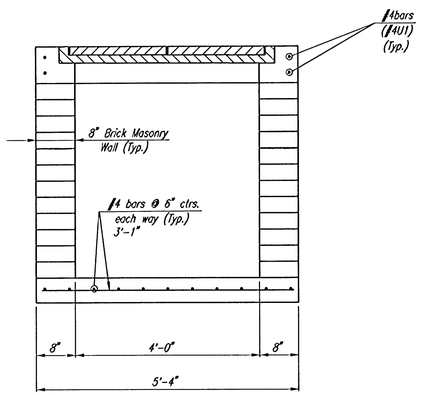

SECTION A-A

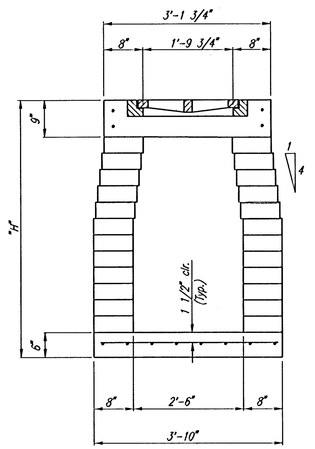

SECTION B-B

STANDARD AREA INLET

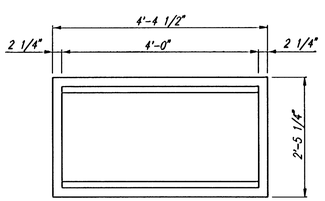

FRAME DETAIL
(Wt.=460 lbs.)

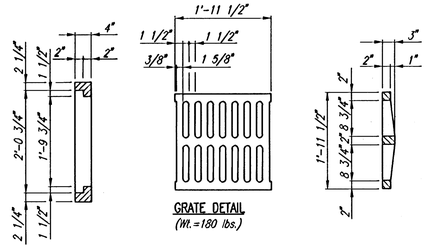

GRATE DETAIL
(Wt.=180 lbs.)

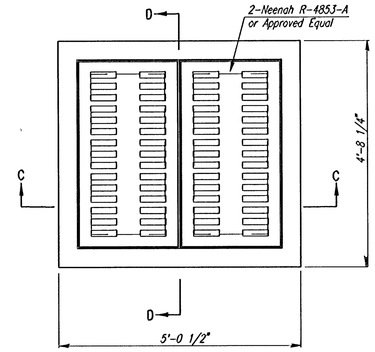

PLAN

GENERAL NOTES

CONCRETE SHALL HAVE A MINIMUM 28 DAY COMPRESSIVE STRENGTH OF 4000 PSI. ALL PIPES SHALL BE FLUSH CUT PRIOR TO BEING CAST INTO WALLS.

REINFORCING STEEL SHALL BE GRADE 60, A.S.T.M. A615. ALL DIMENSIONS RELATIVE TO PLACEMENT OF REINFORCING ARE TO THE CENTERLINE OF BARS UNLESS OTHERWISE NOTED.

INLET CASTINGS SHALL BE MANUFACTURED USING DUCTILE IRON CONFORMING TO ASTM A536-80 GRADE 65-45-12. DIMENSIONS AND WEIGHTS SHOWN ON THE DETAILED DRAWINGS SHALL BE CONSIDERED AS MINIMUM REQUIREMENTS AND ANY DEVIATIONS FROM THE DIMENSIONS SHOWN MUST BE SPECIFICALLY APPROVED. THE FINISHED CASTINGS SHALL BE OF UNIFORM QUALITY, FREE FROM BLOWHOLES, POROSITY, HARD SPOTS, SHRINKAGE DISTORTIONS OR OTHER DEFECTS.

INLET FLOOR SHALL BE SHAPED WITH UNREINFORCED CONCRETE (8 SACK SAND MIX) TO CREATE FLOW CHANNELS AND TO INCREASE HYDRAULIC EFFICIENCY SUCH THAT THE INLET WILL BE SELF CLEANING BETWEEN ALL INLET AND/OR OUTLET PIPES.

PIPES ENTERING EXISTING STRUCTURE SHALL BE CENTERED ON INSIDE FACE OF WALL.

ALL EXPOSED STRUCTURAL STEEL SHALL BE PAINTED WITH A COAT OF INORGANIC ZINC PRIMER AND THEN WITH A TOP COAT OF OR A FIELD COAT OF ORGANIC ZINC, EACH COAT TO BE 3 TO 4 MILS. STRUCTURAL STEEL USED TO FABRICATE THE SPECIAL AREA INLET FRAME SHALL COMPLY WITH A.S.T.M. A36. WELDING SHALL COMFORM TO THE STRUCTURAL WELDING CODE A.W.S. D1.1-88.

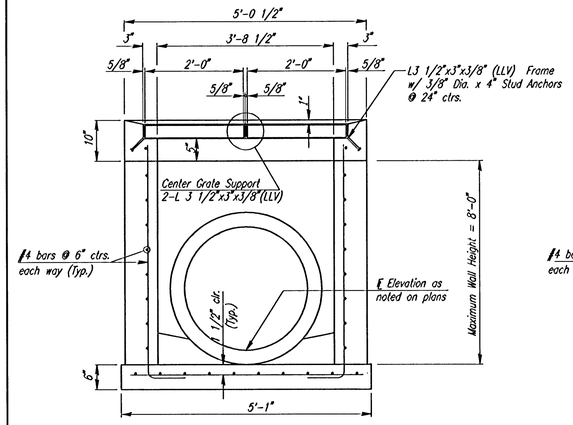

SECTION C-C

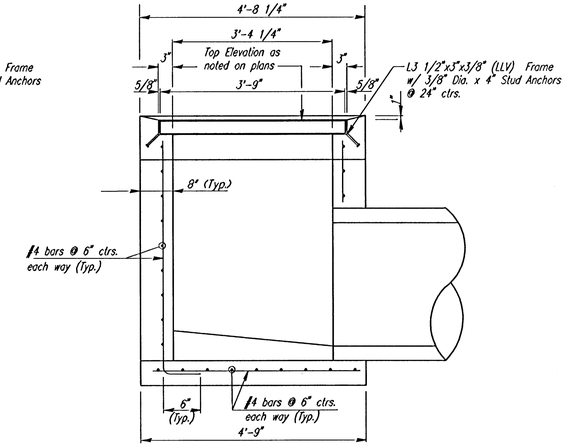

SECTION D-D

SPECIAL AREA INLET

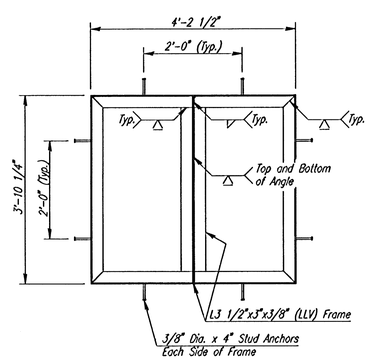

FRAME DETAIL
(For Special Area Inlet)

Note:
Frame to mate with 2 Neenah R-4853-A Grates or approved equal.

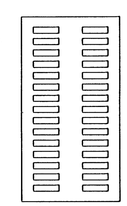

Note:
Grate shall be Neenah R-4853-A or approved equal.

GRATE DETAIL
(Wt.=520 lbs.)
(2 Required)

No.	Revision	By	Date

FONTANA ADDITION-PHASE 1

AREA INLET DETAILS

JAMES L. ARMOUR, P.E.- CITY ENGINEER
CITY OF WICHITA PROJECT NO. 472-84086

Professional **E**ngineering **C**onsultants, P.A.
303 S. TOPEKA • WICHITA, KANSAS 67202
316-262-2691 • FAX 316-262-3003

Designed by BDB, BLB	Job No. 35-04485-000	Sheet 49 of 101
Drawn by BJS	Date September 2004	

Saved 03-14-2006 8:25:08 AM by BJS
Plot Scale 1:1 03-14-2006 8:26:37 AM by BJS
C:\2004\04485\00001-PEC\AREA INLET