

PAVEMENT UNDERDRAIN PLAN
AT BACK OF CURB

NO SCALE

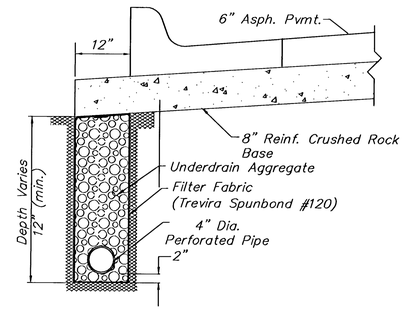

PAVEMENT UNDERDRAIN SECTION A–A
AT BACK OF CURB

NO SCALE

UNDERDRAIN AGGREGATE

Percent Of Aggregate Retained

1"	0
3/4	20–60
3/8	45–80
#4	90–100
#8	95–100

Rock Quality Shall Conform To The Requirements Specified By The KDOT 1990 Edition Standard Specification Subsection 1102 For Durability Class 1.

PAVEMENT UNDERDRAIN

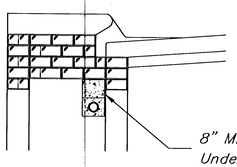

(Min. 16 Perforations Per Lin. Ft. @ 1/4" Dia.)
Perforations To Be on Bottom Half

SECTION A–A

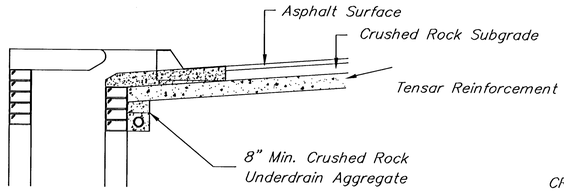

CRUSHED ROCK GRADATION REQUIREMENTS
Percent of Aggregate Retained

1 1/2"	0
3/4"	15–60
# 4	40–80
#40	74–92
P–200	4–12

Rock Quality Shall Be The Same As Specified For Coarse Aggregate For Asphalt Concrete Mixes.

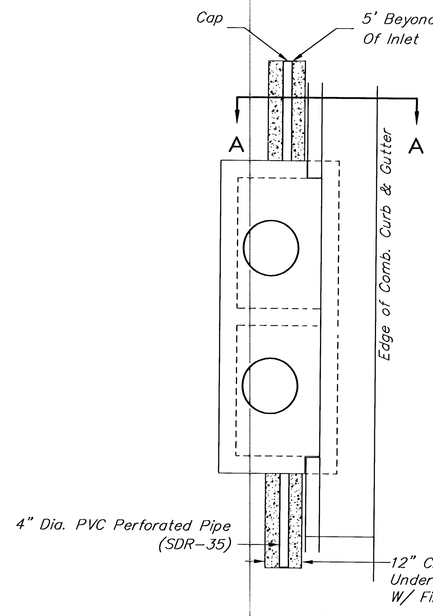

TYPE 1 & 2 INLET

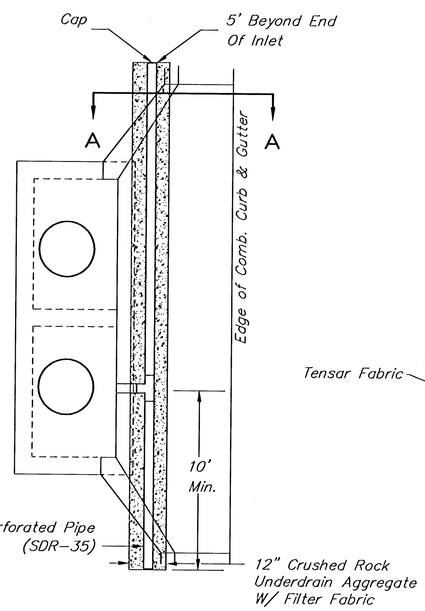

TYPE 1–A INLET

NOTE: Place 4" PVC Perforated Pipe at all drainage sump locations.

Cost of Underdrain System at sumps to be incidental to the Reinforced Crushed Rock Subgrade.

PAVEMENT UNDERDRAIN AT SUMPS

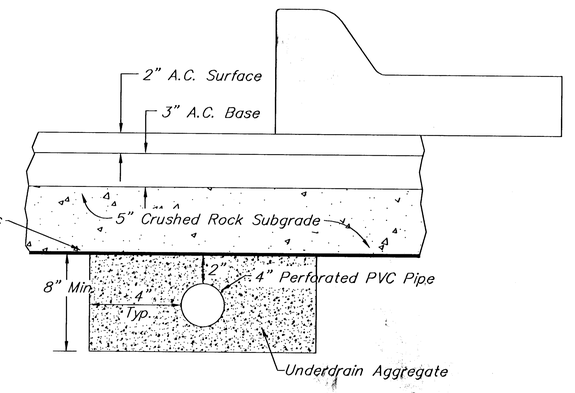

CITY OF WICHITA

PAVEMENT UNDERDRAIN DETAIL

JIM ARMOUR, P.E. – CITY ENGINEER

PROJECT NUMBER	INDEX CODE
472–83831	706866
DATE	SHEET 35 OF 111

J:\Civil\03245\dwg\Details\UNDERDRAIN.dwg 1/18/2005 11:30:05 AM CST