TRAFFIC CONTROL SIGNS & SIGN POST

Station	Location from ℄	Classification – Each																Sign Post Length	
		R1-1	R2-1	R3-7L	R3-9b	W4-2	①	R4-7	OM1-1	W1-3L	W1-3R	W13-1	W11-2	W14-2	W16-7p	W16-9p		Breakaway 1-3/4"x1-3/4"	"U"-Channel
McCormick																			
21+87.82	℄							1	1									10.5'	
25+53.11	℄								1									6.5'	
25+53.11	Rt.									1		1						12.0'	
27+94.22	℄							1										6.5'	
28+75.51	Rt.												1			1		12.0'	
29+61.03	℄							1										6.5'	
29+69.56	Rt.												1		1			12.0'	
29+80.63	Lt.												1		1			12.0'	
29+87.37	℄							1										6.5'	
31+08.60	Lt.												1			1		12.0'	
32+22.12	℄							1										6.5'	
34+29.98	Lt.									1		1						12.0'	
34+58.41	℄								1									6.5'	
35+27.09	℄								1									6.5'	
35+82.15	Rt.								1									6.5'	
36+50.00	Rt.										1	1						12.0'	
37+60.87	℄							1										6.5'	
41+83.41	Rt.												1			1		12.0'	
43+14.04	℄							1										6.5'	
43+21.08	Rt.												1		1			12.0'	
43+33.93	Lt.												1		1			12.0'	
44+08.33	℄							1										6.5'	
44+72.53	Lt.												1			1		12.0'	
45+73.53	℄							1										6.5'	
46+27.53	Lt.			1														10.5'	
46+93.80	Lt.										1	1						12.0'	
47+82.84	Lt.			1														10.5'	
Sheridan																			
9+06.79	Lt.													1				12.0'	
9+53.55	Rt.	1																10.5'	
10+40.15	Lt.	1																10.5'	
Dondlinger																			
9+54.04	Rt.	1																10.5'	
Total		3		2				1	13	2	2	4	8	1	4	4		297.0	

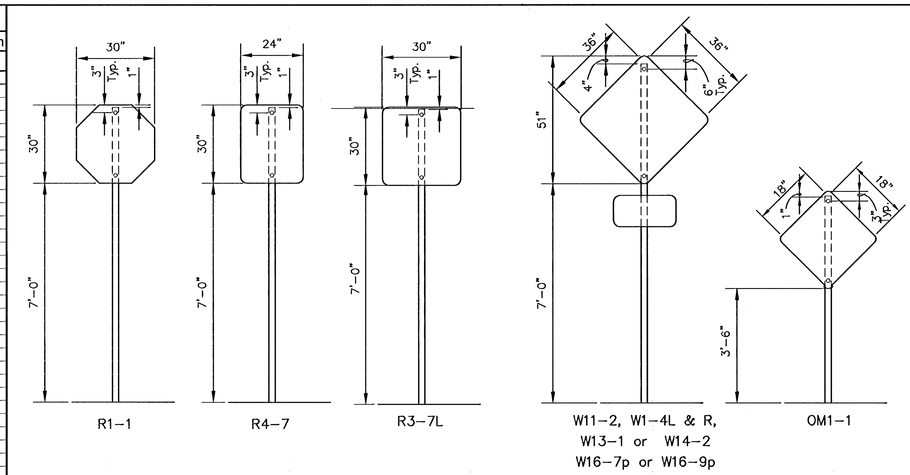

SIGN MOUNTING DETAILS

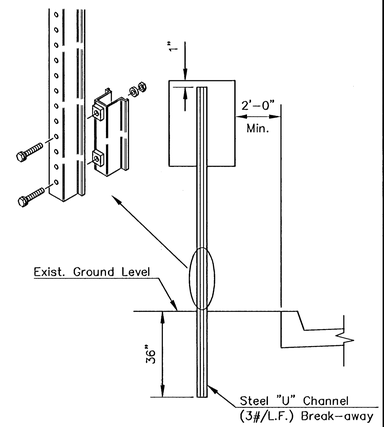

TRAFFIC SIGN INSTALLATION DETAIL

FOR SIGNS NOT GREATER THAN 12" WIDE

SIGN POST LENGTH SUMMARY

BREAKAWAY SIGN POST:

1 3/4"x1 3/4"x LENGTH	EACH
6.5'	12
10.5'	6
12.0'	13
2-1/4"x2-1/4"x18"	31
2"x2"x36"	31

U-CHANNEL

LENGTH	EACH
STUBS 3'	
POSTS 8'	
POSTS 9'	
POSTS 9-1/2'	
POSTS 11'	

RECAPITULATION OF MATERIALS

ITEMS	TOTAL	UNIT
Sign Face, (High Intensity HA Reflective Sheeting)	183.54	S.F.
Steel "U" Channel Sign Post		L.F.
Breakaway Sign Post, 1-3/4" x 1-3/4"	297.0	L.F.
Breakaway Anchor Sleeve, 2-1/4" x 2-1/4" x 18"	46.5	L.F.
Breakaway Sign Post Anchor, 2" x 2" x 36"	93.0	L.F.

RECAPITULATION OF MATERIALS

BID ITEMS	TOTAL	UNIT
Signing	LUMP SUM	S.F.

SIGN DESCRIPTION

CLASSIFICATION	TYPE	SIZE	AREA
OM1-1	OBJECT MARKER TYPE 1	18"x18"	2.25 SQ. FT.
R1-1	STOP SIGN	30"x30"	5.18 SQ. FT.
R3-7L	LT. LANE MUST TURN LT.	30"x30"	6.25 SQ. FT.
R4-7	KEEP RIGHT	24"x30"	5.00 SQ. FT.
W11-2	PEDESTRIAN CROSSING	36"x36"	6.75 SQ. FT.
W1-3L&R	REVERSE CURVE (LT & RT)	36"x36"	9.00 SQ. FT.
W13-1	ADISORY SPEED (30 MPH)	18"x18"	2.25 SQ. FT.
W14-2	NO OUTLET	30"x30"	6.25 SQ. FT.
W16-7p	DIAGONAL ARROW	24"x12"	2.00 SQ. FT.
W16-9p	AHEAD	24"x12"	2.00 SQ. FT.

SNOW EMERGENCY ROUTE ①

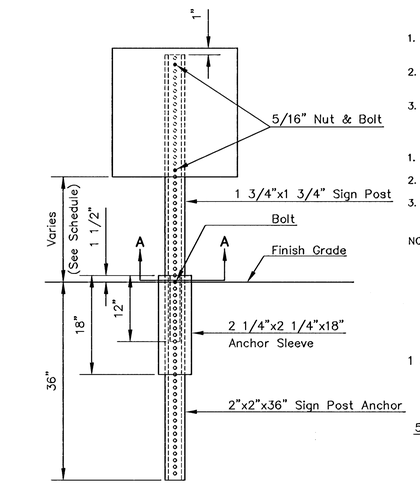

PAVEMENT INSTALLATION SEQUENCE

1. SIGN POST ANCHOR DRIVEN INTO SUBGRADE PRIOR TO THE PLACEMENT OF THE PAVEMENT.
2. ANCHOR SLEEVE DRIVEN INTO SUBGRADE OVER THE SIGN POST ANCHOR PRIOR TO THE PLACEMENT OF THE PAVEMENT.
3. INSERT SIGN POST INTO THE SIGN POST ANCHOR AND BOLT IN PLACE.

GROUND INSTALLATION SEQUENCE

1. SIGN POST ANCHOR DRIVEN INTO THE GROUND.
2. ANCHOR SLEEVE DRIVEN INTO THE GROUND OVER THE SIGN POST ANCHOR.
3. INSERT SIGN POST INTO THE SIGN POST ANCHOR AND BOLT IN PLACE.

NOTE: IN ALL INSTALLATIONS THE FIRST HOLE ABOVE THE FINISHED GRADE LEVEL IN ALL THREE UNITS MUST BE IN LINE FOR INSERTION OF THE BOLT.

ALL BOLTS AND NUTS FOR FASTENING THE SIGNS AND SIGN POST ASSEMBLY SHALL COMPLY WITH SECTION 1614 AND ALL WASHERS SHALL COMPLY WITH SECTION 1614 OF THE STANDARD SPECIFICATION FOR STATE ROAD AND BRIDGE CONSTRUCTION (1990 EDITIO) AND SHALL BE SUBSIDIARY ITEM.

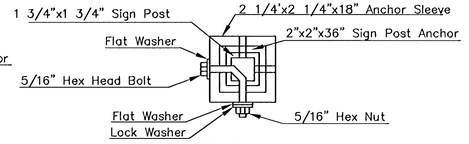

SECTION A-A

BREAK-AWAY SIGN POST DETAIL

NOTE: ALL LETTER, NUMBER, & SYMBOL SIZES, SPACING, & COLORS AND THE SIGN COLORS SHALL CONFORM TO THE CURRENT "MANUAL ON UNIFORM TRAFFIC CONTROL DEVICES."

ALL SIGN MATERIAL TO BE 0.080" ALUMINUM.

J:\Civil\03245\DWG\Details\SIGNDTL4.DWG 11/18/2004 09:25:44 AM CST

CITY OF WICHITA

STREET SIGN DETAILS

JIM ARMOUR, P.E. – CITY ENGINEER

PROJECT NUMBER	INDEX CODE
472-83831	706866

DATE