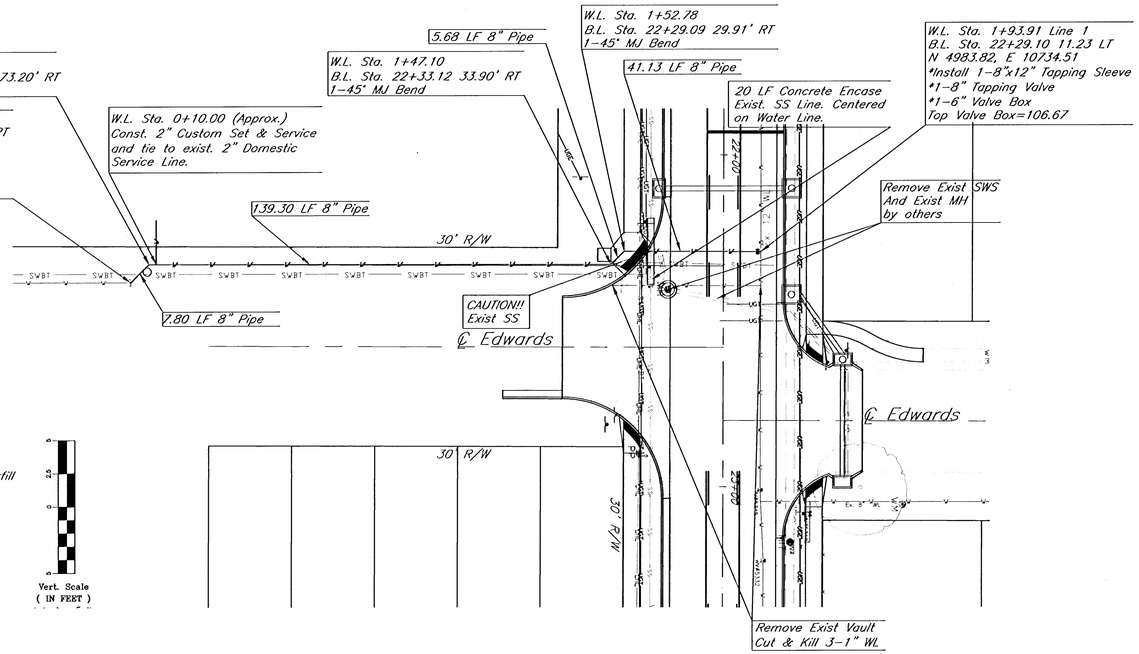

*By Wichita Water Dept.

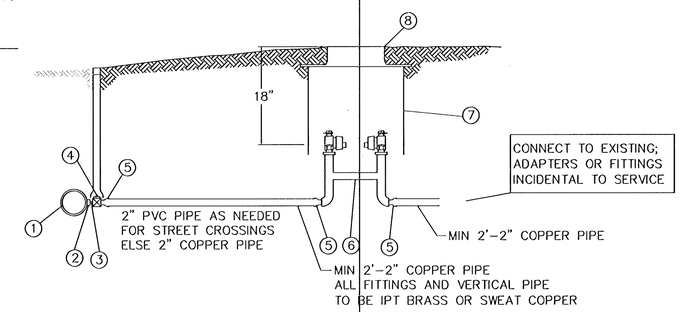

MATERIALS LIST:

1. EXISTING WATER MAIN, PIPE DIAMETER="D"
2. "D" x 2" BRASS SADDLE
3. 2" X 3" BRASS NIPPLE
4. 2"CURBSTOP AY MCDONALD, FORD B11-777, MUELLER 300 B20283 (WITH STANDARD VALVE BOX)
5. 2" F COPPER TO MIPT ADAPTER FORD C84-77
6. 2" CUSTOM SETTER W/BYPASS FORD VV7724B1177
7. 30" WHITE PVC METER BOX - 24" HIGH, SMOOTH INSIDE, RIBBED OUTSIDE, NO NOTCHES
8. 30" X 20" MONITOR COVER WITH 20" LID WITHOUT LOCK FORD MC30LL

2" CUSTOM SET & SERVICE

Back Fill Note:
Under proposed Pavement area, backfill trench with jetted sand. Cost to be subsidiary to pipe unit cost.

Vert. Scale
(IN FEET)

(IN FEET)
1 inch = 20 ft.

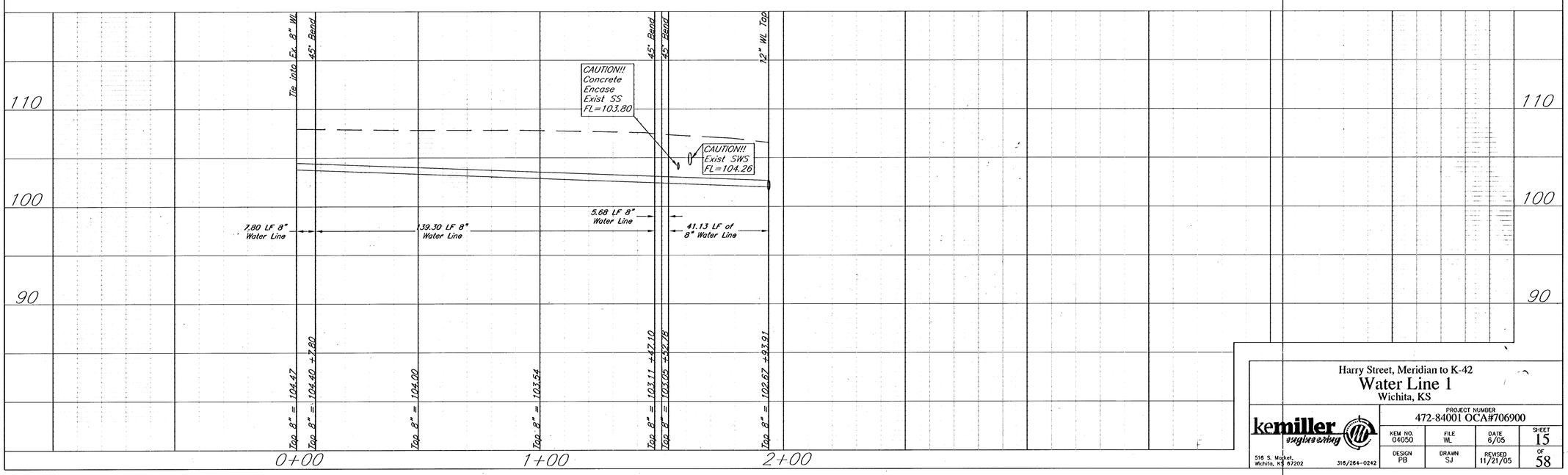

Harry Street, Meridian to K-42
Water Line 1
Wichita, KS

kemiller engineers
516 S. Market,
Wichita, KS 67202
316/264-0242

PROJECT NUMBER
472-84001 OCA#706900

KEM NO.	FILE	DATE	SHEET
04050	WL	6/05	15
DESIGN	DRAWN	REVISED	OF
PB	SJ	11/21/05	58