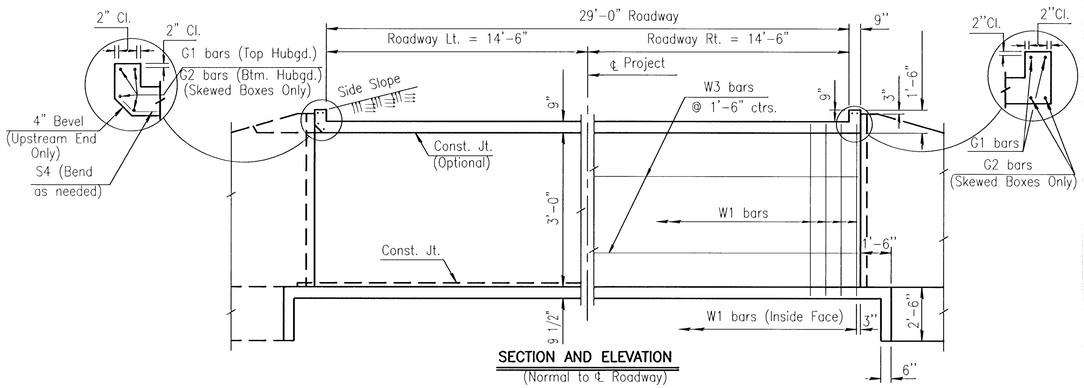

SECTION AND ELEVATION
(Normal to ℄ Roadway)

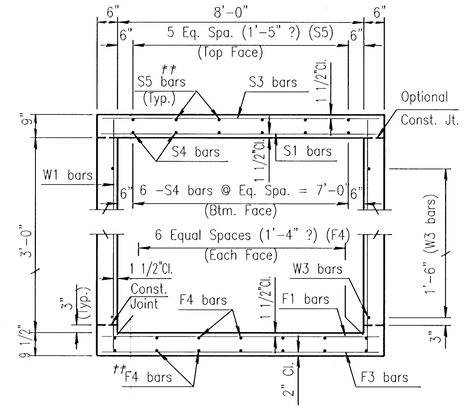

TYPICAL SECTION

Note:
S3 bars omitted unless grade box or slab thickness is greater than or equal to 12".

Note:
F3 bars omitted unless floor thickness is greater than or equal to 12".

†† Omit S5 bars when S3 bars are omitted and omit the bottom layer of F4 bars when F3 bars are omitted.

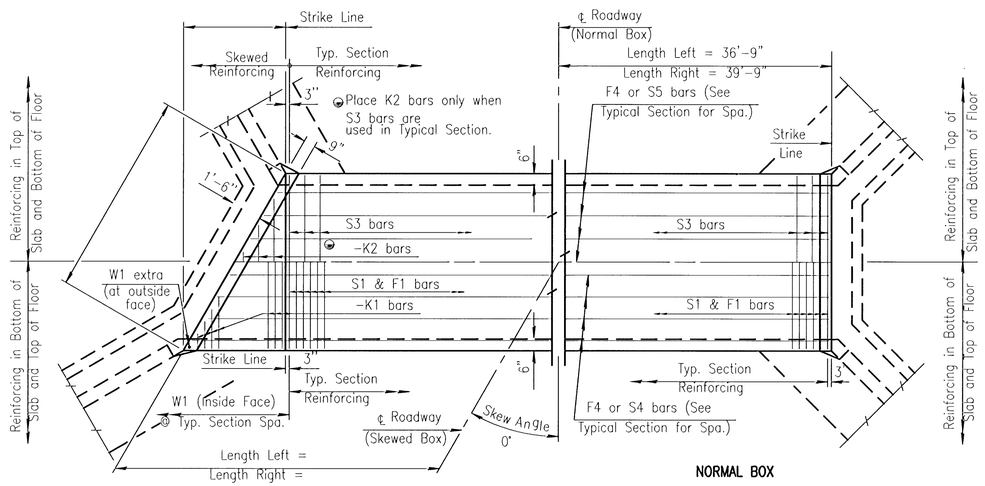

PLAN

CULVERT SUMMARY														
Flow Line Elev. Lt.	Flow Line Elev. Rt.	Crown Gr. Elev.	Design Fill Ht.	Skew	Left Wings	Right Wings	Scour Apron	Soil Saver	Concrete			Reinf. Steel (Gr. 60)		
									Barrel (Cu.Yds.)	Wings (Cu.Yds.)	Total (Cu.Yds.)	Barrel (Lbs.)	Wings (Lbs.)	Total (Lbs.)
1324.80	1325.20	1330.87	3	0	FLARED	FLARED	YES	NO	48.17	9.16	57.33	5479	604	6083

△ Epoxy Coated Bars

BAR SCHEDULE																																																	
F1								F3				F4				△S1								△S3				△S4				△S5			
Size	Spa.	No.	Length	Size	Spa.	No.	Length	Size	Spa.	No.	Length	Size	No.	Length	Size	No.	Length	Size	Spa.	No.	Length	Size	Spa.	No.	Length	Size	No.	Length	Size	No.	Length
6	6"	153	8'-8"	N/A	N/A	N/A	N/A	N/A	N/A	N/A	N/A	4	14	38'-9"	6	6"	153	8'-8"	N/A	N/A	N/A	N/A	N/A	N/A	N/A	N/A	4	12	38'-9"	N/A	N/A	N/A
△K1				△K2				W1								W3								△G1				△G2							
Size	Spa.	No.	Length	Size	Spa.	No.	Length	Size	Spa.	No.	Length	Size	Spa.	No.	Length	Size	No.	Length	Size	Spa.	No.	Length	Size	No.	Length	Size	No.	Length	Size	Spa.	No.	Length
N/A	N/A	N/A		N/A	N/A	N/A		4	9"	204	4'-3"	N/A	N/A	N/A	N/A	4	8	38'-9"	N/A	N/A	N/A	N/A	5	4	8'-8"	N/A	N/A	N/A				

Minimum Splice Lengths	
#4	1'-4"
#5	1'-8"
#6	2'-0"

GENERAL NOTES

LOADING: HS20-44 AASHTO Specifications, 1983 Edition.
UNIT STRESSES: Grade 4.0 Concrete; f'c = 4,000 p.s.i.
Reinforcing Steel; fy = 60,000 p.s.i.
FILL HEIGHT: Unless otherwise noted, the Design Fill Height is measured from the riding surface at the culvert and shall include the surfacing.
CONCRETE: Grade 4.0 Concrete shall be used throughout. Bevel all exposed edges with a 3/4 inch triangular moulding. Where Grade 4.0 Concrete (AE) is specified, it shall be placed in the top slab above the Construction Joint.
REINFORCING: All reinforcing shall conform to ASTM A615, Grade 60. All dimensions relative to reinforcing steel shall be to centerline of bar unless otherwise noted.
EXCAVATION: Excavation for culverts less than bridge length shall not be paid for directly but shall be subsidiary to Grade 4.0 Concrete. Excavation for RCB Bridges shall be paid for as Class ||| Excavation.
SEAL COURSE: A Seal Course may be required by the Engineer. The Seal Course shall be unreinforced Concrete (Commercial Grade) to a minimum depth of 3 inches or as determined by the Engineer. Concrete for the seal course shall be paid for at the unit price set for Concrete for Seal Course.
FOUNDATION STABILIZATION: Foundation Stabilization may be required as directed by the Engineer. The depth of Foundation Stabilization shall be determined by the Engineer. Foundation Stabilization shall be paid for at the determined Unit Price set for Foundation Stabilization. See Auxiliary Details.
QUANTITIES: The quantities shown in the Culvert Summary include apron and/or soil saver quantities when their construction is required by the plans. Payment for additional quantities that result from including seal course and/or floating apron, as a change in original plans, shall be made at the Unit Price bid for the various items involved.
GRANULAR BACKFILL (WINGWALLS): Special backfill procedures may be required at the direction of theEngineer. See Auxiliary Details Sheet.
STRIKE LINE: Wingwalls and that portion of the RCB outside the Strike Line shall be constructed level. Footing for wingwalls shall be constructed with the culvert floor. See wingwall detail sheet.

SUMMARY OF QUANTITIES

Concrete (Grade 4.0)	37.8	C.Y.
Concrete (Grade 4.0)(AE)	19.5	C.Y.
Reinforcing Steel (Gr. 60)	3740	Lbs.
Reinforcing Steel (Epoxy Coated)	2340	Lbs.
Class ||| Excavation		C.Y.
Foundation Stabilization (Set)	1	C.Y.
Concrete for Seal Course (Set)	1	C.Y.
Granular Backfill (Wingwalls) (Set)	1	C.Y.

NO.	DATE	REVISIONS	BY	APP'D

~~KANSAS DEPARTMENT OF TRANSPORTATION~~
Sta. 0+67.71
SINGLE 8 ft x 3 ft RCB

~~BR 1.8.3 P~~ Sedgwick Co.

FHWA APPROVAL	6-5-91	APP'D	KENNETH F. HURST
DESIGNED	DETAILED	QUANTITIES	TRACED
DESIGN CK.	DETAIL CK.	QUAN CK.	TRACE CK.

No.	Date	By	Approved	Revision

EQUESTRIAN ESTATES ADDITION - PHASE 2
STREET IMPROVEMENTS
RCB DETAILS
CITY OF WICHITA, KANSAS
JAMES L. ARMOUR, P.E. - CITY ENGINEER
C.O.W. Project # 472-83430 O.C.A. # 765969

POE & ASSOCIATES, INC.
CONSULTING ENGINEERS
5940 E. Central, Suite 200 ■ Wichita, KS 67208-4242
Phone 316685-4114 ■ FAX 316685-4444

FINAL

Designed By: JMU/JPD
Drawn By: JPD
Poe Job No.: 1694J
Date: January 2006